THE CONTENTS OF THIS DOCUMENT ARE PROPRIETARY AND CONFIDENTIAL.

أدنوك
ADNOC

ADNOC GROUP PROJECTS AND ENGINEERING

ANCHOR BOLTS AND GROUTING SPECIFICATION

Specification

APPROVED BY:

Abdulmunim Saif Al Kindy
NAME: Abdulmunim Al Kindy
TITLE: Executive Director PT&CS
EFFECTIVE DATE:

AGES-SP-01-004

ص ب 898، أبوظبي، الإمارات العربية المتحدة
PO Box 898, Abu Dhabi, UAE
adnoc.ae

شركة بترول أبوظبي الوطنية
Abu Dhabi National Oil Company

All parties consent to this document being signed electronically -ƀTP&TC/S/ƀR/INT/2021/ƀ691

GROUP PROJECTS & ENGINEERING FUNCTION/ PT&CS DIRECTORATE

CUSTODIAN	Group Projects & Engineering / PT&CS
ADNOC	Specification applicable to ADNOC & ADNOC Group Companies

REVISION HISTORY

DATE	REV. NO	PREPARED BY (Designation/ Initial)	REVIEWED BY (Designation/ Initial)	ENDORSED BY (Designation / Initial)	ENDORSED BY (Designation / Initial)
24-Feb-2021	1	Khalid Adel / TL - Civil - AGP KADEL Digitally signed by Khaled Adel DN: cn=Khaled Adel, o=AGP, ou=TE, email=kadel@adnoc.ae, c=AE Date: 2021.02.28 15:48:48 +04'00'	Ashwani Kumar Kataria/ A/MIHE,TC-Eng Digitally signed by Ashwani Kumar Kataria DN: cn=Ashwani Kumar Kataria, o=ADNOC Onshore, ou=ADNOC Onshore, email=akataria@adnoc.ae, c=AE Date: 2021.03.31 13:39:25 +04'00' Reuben Yagambaram/ Senior Advisor, Upstream Offshore Projects Reuben Yagambaram Digitally signed by Reuben Yagambaram Date: 2021.04.13 16:03:06 +04'00'	Abdulla Al Shaiba/ VP-GPE 21/04/2021	Zaher Salem/ SVP-GPE 22/04/2021

Group Projects & Engineering is the owner of this Specification and responsible for its custody, maintenance and periodic update.

In addition, Group Projects & Engineering is responsible for communication and distribution of any changes to this Specification and its version control.

This specification will be reviewed and updated in case of any changes affecting the activities described in this specification.

All parties consent to this document being signed electronically -ÐP&ŦÆ/ÐR/INT/2021/Ð691

INTER-RELATIONSHIPS AND STAKEHOLDERS

a. The following are inter-relationships for implementation of this Specification:

   i. ADNOC Upstream and ADNOC Downstream Directorates; and

   ii. ADNOC Onshore, ADNOC Offshore, ADNOC Sour Gas, ADNOC Gas Processing. ADNOC LNG, ADNOC Refining, Fertil, Borouge, Al Dhafra Petroleum, Al Yasat

b. The following are stakeholders for the purpose of this Specification:

   i. ADNOC PT&CS Directorate

c. This Specification has been approved by the ADNOC PT&CS is to be implemented by each ADNOC Group company included above subject to and in accordance with their Delegation of Authority and other governance-related processes in order to ensure compliance.

d. Each ADNOC Group company must establish/nominate a Technical Authority responsible for compliance with this Specification.

DEFINITIONS

"**ADNOC**" means Abu Dhabi National Oil Company.

"**ADNOC Group**" means ADNOC together with each company in which ADNOC, directly or indirectly, controls fifty percent (50%) or more of the share capital.

"**Approving Authority**" means the decision-making body or employee with the required authority to approve Policies & Procedures or any changes to it.

"**Business Line Directorates**" or "**BLD**" means a directorate of ADNOC which is responsible for one or more Group Companies reporting to, or operating within the same line of business as, such directorate.

"**Business Support Directorates and Functions**" or "**Non- BLD**" means all the ADNOC functions and the remaining directorates, which are not ADNOC Business Line Directorates.

"**CEO**" means chief executive officer.

"**Group Company**" means any company within the ADNOC Group other than ADNOC.

"Specification" means this Anchor Bolts and Grouting specification.

CONTROLLED INTRANET COPY

The intranet copy of this document located in the section under Group Policies on One ADNOC is the only controlled document. Copies or extracts of this document, which have been downloaded from the intranet, are uncontrolled copies and cannot be guaranteed to be the latest version.

All parties consent to this document being signed electronically - PT&CS/DR/INT/2021/6593

TABLE OF CONTENTS

1 GENERAL 7
1.1 INTRODUCTION 7
1.2 PURPOSE 7
1.3 DEFINITIONS AND ABBREVIATIONS 7
SECTION A - GENERAL 9
2 REFERENCE DOCUMENTS 9
2.1 INTERNATIONAL CODES AND STANDARDS 9
2.2 ADNOC SPECIFICATIONS 12
2.3 STANDARD DRAWINGS 12
2.4 OTHER REFERENCES 13
3 DOCUMENT PRECEDENCE 13
4 SPECIFICATION DEVIATION / CONCESSION CONTROL 13
5 DESIGN CONSIDERATIONS / MINIMUM DESIGN REQUIREMENTS 13
SECTION B – TECHNICAL REQUIREMENTS 14
6 ANCHOR BOLTS 14
6.1 GENERAL 14
6.2 SELECTION OF ANCHOR BOLT TYPES 14
6.3 MATERIALS 15
6.4 BOLTS WITH TWO NUTS 17
6.5 BOLTS WITH ONE NUT 17
6.6 WASHERS 17
6.7 SLEEVES 18
6.8 PROTECTION AND CORROSION 18
6.9 NON-STANDARD ANCHOR BOLTS 19
6.10 BOLT PROJECTION 19
6.11 USE OF STANDARD ANCHOR BOLT SCHEDULES 20
6.12 ANCHOR BOLTS IN PEDESTAL 20
6.13 MINIMUM SPACING OF ANCHOR BOLTS 24
6.14 PEDESTAL EDGE DISTANCES 24
6.15 CONSTRUCTION NOTES FOR LOCATION AND TOLERANCE OF ANCHOR BOLTS 24
6.16 POST - INSTALLED ANCHOR BOLTS (MECHANICAL / CHEMICAL) 25
6.17 PARAMETERS FOR DESIGN OF ANCHOR BOLTS 25
7 GROUTING 26

All parties consent to this document being signed electronically - DP&T/SJ/DR/INT/2021/6593

7.1 GENERAL 26
7.2 SELECTION OF GROUT TYPES 26
7.3 MATERIALS 27
7.4 INSTALLATION 28
7.5 TESTING 33
7.6 HANDLING 34
7.7 DISPOSAL 34
8 ADDITIONAL SPECIFIC REQUIREMENTS 34
SECTION C – OTHER REQUIREMENTS 35
9 QUALITY PLANS 35
9.1 GENERAL 35
9.2 INSPECTION, TESTING AND REPORTING 35
9.3 QUALITY CONTROL AND ASSURANCE 35
10 SUB-CONTRACTORS AND SUPPLIERS 36
11 MATERIAL CERTIFICATIONS 36
12 DOCUMENTATION / MANUFACTURER DATA RECORDS 36
SECTION D – STANDARD DRAWINGS & DATASHEETS 38
13 DATASHEET TEMPLATES 38
14 STANDARD DRAWINGS 38
SECTION E - APPENDICES 39
APPENDIX A1. ATTACHMENTS - TYPICAL ANCHOR BOLT TYPES 39
APPENDIX A2. ANCHOR BOLT TYPE-C INSTALLATION PROCEDURE 40

All parties consent to this document being signed electronically - DP&T/SJDR/INT/2021/6593

LIST OF TABLES

TABLE 1.1 LIST OF ABBREVIATIONS 8
TABLE 6.1 STANDARD ANCHOR BOLT TYPES 15
TABLE 6.2 USAGE SUMMARY OF ANCHOR BOLTS TYPES 15
TABLE 6.3 NORMAL STRENGTH AND NORMAL SERVICE ANCHOR BOLTS - MATERIALS 16
TABLE 6.4 HIGH STRENGTH (HS) AND NORMAL SERVICE ANCHOR BOLTS - MATERIALS 16
TABLE 6.5 LOW TEMPERATURE / COLD SERVICE ANCHOR BOLTS - MATERIALS 17
TABLE 6.6 ANCHOR BOLTS DESIGNATION 20
TABLE 6.7 MINIMUM ANCHOR BOLT TO CONCRETE PEDESTAL EDGE DISTANCE 24
TABLE 6.8 TOLERANCES FOR ANCHOR BOLT EMBEDMENT 25
TABLE 7.1 GROUT TYPES FOR EQUIPMENT AND STRUCTURES 27

LIST OF FIGURES

FIGURE 6.1 ANCHOR EXTENDED INTO MAT / FOUNDATION BASE SLAB 21
FIGURE 6.2 REINFORCEMENT FOR RESISTING ANCHOR BOLT TENSION IN SQUARE AND RECTANGULAR PEDESTALS 22
FIGURE 6.3 REINFORCEMENT FOR RESISTING ANCHOR BOLT TENSION IN OCTAGONAL PEDESTALS 23

All parties consent to this document being signed electronically - DP&T/JOR/INT/2021/6593

1 GENERAL

1.1 Introduction

This specification provides materials, installation and acceptability requirements for anchor bolts and grout used between foundation plates, machinery, steel structures and concrete foundation.

This specification is not applicable to pressurized tanks (API 620) or refrigerated storage tanks (API 625).

1.2 Purpose

This specification defines the minimum requirements and recommendations for selection, design of anchor bolts and fixings for equipment, structural steelwork applications and the technical requirements for furnishing and installation of cement-based non shrink grout and epoxy non shrink grout.

1.3 Definitions and Abbreviations

1.3.1 Definitions

The following defined terms are used throughout this specification:

'**[PSR]**' indicates a mandatory Process Safety Requirement

"**COMPANY**" means ADNOC, ADNOC Group or an ADNOC Group Company, and includes any agent or consultant authorized to act for, and on behalf of the COMPANY.

"**CONTRACTOR**" means the parties that carry out all or part of the design, engineering, procurement, construction, commissioning or management for ADNOC projects. CONTRACTOR includes its approved MANUFACTURER(s), SUPPLIER(s), SUB-SUPPLIER(s) and SUB-CONTRACTOR(s).

"**MANUFACTURER**" means the Original Equipment Manufacturer (OEM) or MANUFACTURER of one or more of the component(s) which make up a sub-assembly or item of equipment assembled by the main SUPPLIER or his nominated SUB-SUPPLIER.

'may' means a permitted option

'shall' indicates mandatory requirements

'should' means a recommendation

"**SUB-CONTRACTOR**" means any party engaged by the CONTRACTOR to undertake any assigned work on their behalf. COMPANY maintains the right to review all proposed SUB-CONTRACTORs; this right does not relieve the CONTRACTOR of their obligations under the Contract, nor does it create any contractual relationship between COMPANY and the SUB-CONTRACTOR.

"SUPPLIER" means the party entering into a Contract with COMPANY to provide the materials, equipment, supporting technical documents and/or drawings, guarantees, warranties and/or agreed services in accordance with the requirements of the purchase order and relevant specification(s). The term SUPPLIER includes any legally appointed successors and/or nominated representatives of the SUPPLIER.

"**SUB-SUPPLIER**" means the sub-contracted SUPPLIER of equipment sub-components software and/or support services relating to the equipment / package, or part thereof, to be provided by the SUPPLIER. COMPANY maintains the right to review all proposed SUB-SUPPLIERS, but this right does

All parties consent to this document being signed electronically - DP&T/SJ/DR/INT/2021/6593

not relieve the SUPPLIER of their obligations under the Contract, nor does it create any contractual relationship between COMPANY and any individual SUB-SUPPLIER.

1.3.2 Abbreviations

The abbreviations used throughout this specification are shown in Table 1.1

Table 1.1 List of Abbreviations

Abbreviations	
ACI	American Concrete Institute
AISC	American Institute of Steel Construction
ANSI	American National Standards Institution
API	American Petroleum Institute
ASCE	American Society of Civil Engineers
ASME	American Society of Mechanical Engineers
ASTM	American Society for Testing and Materials
AWS	American Welding Society
BCD	Bolt Circle Diameter
BS EN	British Standard European Norm
BSI	British Standards Institute
HSE	Health, Safety & Environment
ISO	International Organization for Standardization
ITP	Inspection and Test Plan
NDE	Non-Destructive Examination
PQR	Procedure Qualification Record
QA	Quality Assurance
QC	Quality Control
QCR	Quality Control Record
RPM	Revolutions per Minute
TBC	To be confirmed
UAE	United Arab Emirates

All parties consent to this document being signed electronically - DP&T/SJ/DR/INT/2021/0693

SECTION A - GENERAL

2 REFERENCE DOCUMENTS

2.1 International Codes and Standards

The following Codes and Standards shall form a part of this specification. When an edition date is not indicated for a Code or Standard, the latest edition in force at the time of the contract award SHALL apply.

AMERICAN CONCRETE INSTITUTE (ACI)

ACI 318M/318R	Building Code Requirements for Structural Concrete and Commentary
ACI 336.2R	Suggested Analysis and Design Procedures for Combined Footings and Mats
ACI 350M/350R	Code requirements for Environmental Engineering Concrete Structures and Commentary
ACI 355.2	Qualification of Post-Installed Mechanical Anchors in Concrete and Commentary

AMERICAN NATIONAL STANDARDS INSTITUTION (ANSI)

ANSI B1.1	Unified Inch Screw Threads
ANSI/UL 1709	Standard for Rapid Rise Fire Tests of Protection Materials for Structural Steel

AMERICAN PETROLEUM INSTITUTE (API)

API RP 686	Machinery Installation and Installation Design

AMERICAN SOCIETY OF CIVIL ENGINEERS (ASCE)

Task Committee on Anchorage of the Petrochemical Committee of Energy Division of ASCE	Anchorage Design for Petrochemical Facilities

AMERICAN SOCIETY OF MECHANICAL ENGINEERS (ASME)

ASME B1.1	Unified Inch Screw Threads (UN, UNR, and UNJ Thread Forms)

All parties consent to this document being signed electronically - DP&T/SJ/OR/INT/2021/6593

AMERICAN SOCIETY FOR TESTING AND MATERIALS (ASTM)

ASTM A36/A36M	Standard Specification for Carbon Structural Steel
ASTM A53/A53M	Standard Specification for Pipe, Steel, Black and Hot-Dipped, Zinc-Coated, Welded and Seamless
ASTM A143/A143M	Standard Practice for Safeguarding Against Embrittlement of Hot-Dip Galvanized Structural Steel Products and Procedure for Detecting Embrittlement
ASTM A153/A153M	Standard Specification for Zinc Coating (Hot Dip) on Iron and Steel Hardware
ASTM A193/A193M	Standard Specification for Alloy Steel and Stainless-Steel Bolting for High Temperature or High-pressure Service and Other Special Purpose Applications
ASTM A194/A194M	Standard Specification for Carbon Steel, Alloy Steel, and Stainless-Steel Nuts for Bolts for High Pressure or High Temperature Service, or Both
ASTM A320/A320M	Standard Specification for Alloy-Steel and Stainless-Steel Bolting for Low-Temperature Service
ASTM A385/A385M	Standard Practice for Providing High-Quality Zinc Coatings (Hot-Dip)
ASTM A563/A563M	Standard Specification for Carbon and Alloy Steel Nuts
ASTM C94/C94M	Standard Specification for Ready-Mixed Concrete
ASTM C109/C109M	Compressive Strength of Hydraulic Cement Mortars (Using 2-in. or [50 mm] Cube Specimens)
ASTM C531	Standard Test Method for Linear Shrinkage and Coefficient of Thermal Expansion of Chemical-Resistant Mortars, Grouts, Monolithic Surfacings, and Polymer Concretes
ASTM C579	Standard Test Methods for Compressive Strength of Chemical-Resistant Mortars, Grouts, Monolithic Surfacings, and Polymer Concretes
ASTM C580	Standard Test Method for Flexure Strength and Modulus of Elasticity of Chemical Resistant Mortars, Grouts, Monolithic Surfacings and Polymer Concretes.
ASTM C827/C827M	Standard Test Method for Change in Height at Early Ages of Cylindrical Specimens of Cementitious Mixtures
ASTM C882/C882M	Standard Test Method for Bond Strength of Epoxy-Resin Systems Used With Concrete By Slant Shear
ASTM C939/C939M	Standard Test Method for Flow of Grout for Preplaced-Aggregate Concrete (Flow Cone Method)
ASTM C953	Standard Test Method for Time of Setting of Grouts for Preplaced-Aggregate Concrete in the Laboratory

All parties consent to this document being signed electronically - DP&T/SJ/DR/INT/2021/6593

ASTM C1107/C1107M	Standard Specification for Packaged Dry, Hydraulic-Cement Grout (Nonshrink)
ASTM C1181/C1181M	Standard Test Methods for Compressive Creep of Chemical-Resistant Polymer Machinery Grouts
ASTM C1339/C1339M	Standard Test Method for Flowability and Bearing Area of Chemical-Resistant Polymer Machinery Grouts
ASTM C1602/C1602M	Standard Specification for Mixing Water Used in the Production of Hydraulic Cement Concrete
ASTM F436/F436M	Standard Specification for Hardened Steel Washers Inch and Metric Dimension
ASTM F1554	Standard Specification for Anchor Bolts, Steel, 36, 55, and 105-ksi Yield Strength

AMERICAN WELDING SOCIETY PUBLICATIONS (AWS)

AWS A2.4	Standard Symbols for Welding, Brazing, and Non-destructive Examination
AWS D1.1/D1.1M	Structural Welding Code – Steel
AWS QC1	Specification for AWS Certification of Welding Inspectors

BRITISH STANDARDS INSTITUTE (BSI)

BS 3643-1	ISO metric screw threads Part 1: Principles and basic data
BS 3643-2	ISO metric screw threads Part 2: Specification for selected limits of size
BS 4190	ISO Metric Black Hexagon Bolts, Screws and Nuts – Specification
BS 4320	Specification for Metal washers for general engineering purposes metric series
BS 7419	Specification for Holding down Bolts

EUROCODES (BS EN)

BS EN 1008	Mixing Water for Concrete - Specification for Sampling, Testing and Assessing the Suitability of Water, Including Water Recovered from Processes in the Concrete Industry, as Mixing Water for Concrete
BS EN 1992-4	Eurocode 2 - Design of concrete structures Part 4: Design of fastenings for use in concrete
BS EN 10025 (Parts 1 - 6)	Hot Rolled products of Structural Steels
BS EN 10029	Hot-rolled steel plates 3 mm thick or above - Tolerances on dimensions and shape

All parties consent to this document being signed electronically - DP&T/SJDR/INT/2021/6593

BS EN 10216-1	Seamless steel tubes forpressure purposes — Technical delivery conditions, Part 1: Non-alloy steel tubes with specified room temperature properties
BS EN 14399 (Parts 1 - 6)	High-Strength Structural Bolting assemblies for preloading
BS EN ISO 898-1	Mechanical properties of fasteners made of carbon steel and alloy steel Part 1: Bolts, screws and studs with specified property classes - Coarse thread and fine pitch thread
BS EN ISO 898-2	Mechanical properties of fasteners made of carbon steel and alloy steel - Part 2: Nuts with specified property classes - Coarse thread and fine pitch thread
BS EN ISO 1461	Hot dip galvanized coatings on fabricated iron and steel articles - Specifications and test methods
BS EN ISO 4032	Hexagon regular nuts (style 1) - Product grades A and B
BS EN ISO 4034	Hexagon regular nuts (style 1) - Product grade C
BS EN ISO 7089	Plain washers. Normal series - Product grade A
BS EN ISO 7091	Plain washers. Normal series - Product grade C
BS EN ISO 9001	Quality Management Systems – Requirements
BS EN ISO 9004	Quality management – Quality of an organization – Guidance to achieve sustained success

2.2 ADNOC Specifications

The following ADNOC general specifications, as available with respective Group Company and as applicable to the Project, shall form a part of this specification. When an edition date is not indicated for a document, the latest edition in force at the time of contract award shall apply.

Concrete Supply & Construction Specification	AGES-SP-01-001
Structural Steel Supply, Fabrication and Erection Specification	AGES-SP-01-002
Structural Design Basis – Onshore Specification	AGES-SP-01-003
On-site Material Sampling and Testing Laboratory Specification	TBC

2.3 Standard Drawings

The following ADNOC standard drawings, as available with respective Group Company and as applicable to the Project, shall form a part of this specification. When an edition date is not indicated for a document, the latest edition in force at the time of contract award shall apply.

Steel Works General Notes	TBC
Anchor Bolts Material-Fabrication-Marking	TBC
Anchor Bolt Details	TBC

All parties consent to this document being signed electronically - DP&T/SJDR/INT/2021/6593

2.4 Other References

Not applicable.

3 DOCUMENT PRECEDENCE

The specifications and codes referred to in this Specification shall, unless stated otherwise, be the latest approved issue at the time of contract award.

It shall be the CONTRACTOR's responsibility to be, or to become, knowledgeable of the requirements of the referenced Codes and Standards.

The CONTRACTOR shall notify the COMPANY of any apparent conflict between this specification, the related data sheets, the Codes and Standards and any other specifications noted herein.

Resolution and/or interpretation precedence shall be obtained from the COMPANY in writing before proceeding with the design/manufacture.

In case of conflict, the order of document precedence shall be:

a. UAE Statutory requirements

b. ADNOC HSE Standards

c. Equipment datasheets and drawings

d. Project Specifications and standard drawings

e. Company Specifications

f. National / International Standards

4 SPECIFICATION DEVIATION / CONCESSION CONTROL

Any technical deviations to the Purchase Order and its attachments including, but not limited to, the COMPANY's General Specifications shall be sought by the CONTRACTOR only through technical deviation request format. Technical deviation requests require COMPANY'S review/approval, prior to the proposed technical changes being implemented. Technical changes implemented prior to COMPANY approval are subject to rejection.

5 DESIGN CONSIDERATIONS / MINIMUM DESIGN REQUIREMENTS

Refer to Section B of this Specification.

All parties consent to this document being signed electronically - DP&T/SJ/DR/INT/2021/6593

SECTION B – TECHNICAL REQUIREMENTS

6 ANCHOR BOLTS

6.1 General

Steel structures and plant equipment are subjected to environmental, static and vibratory forces or other forces which may produce tension and shear on the foundation anchor bolts and must be securely anchored to their foundation supports with adequate factors of safety.

a. Anchor bolts design and construction shall be in accordance with ACI 318 or BS EN 1992-4.

b. For foundations supporting static equipment, the MANUFACTURER / SUPPLIER shall provide anchor bolt template.

c. Anchor bolts and sleeves shall be positioned or templated in and securely anchored before placing concrete.

   i. Welding of these items to the reinforcing bars shall not be permitted.

   ii. For tall equipment like columns, vertical vessels and reactors, anchor bolts shall be set with substantial templates.

   iii. Sufficient clearance between the anchor bolt / sleeve and adjacent reinforcing bars shall be maintained.

d. The recommended minimum foundation dimensions, the sizes and locations of the anchor bolts, and the forces applied by the machinery must be obtained from the equipment vendors to aid in the design of the foundation.

e. The development of the foundation dimensions shall consider the layout of the equipment, the piping arrangement, maintenance and installation clearances, concrete cover required for anchor bolts, and the minimum outline dimensions recommended by the equipment vendor.

6.2 Selection of Anchor Bolt Types

a. Anchor bolts shall be of proper size to adequately resist all applicable design loads at base of equipment, compressors, vertical vessels, structural column bases, etc.

b. Table 6.1 and Table 6.2 shall be used as a guide to the selection of anchor bolt types. The details of the standard anchor bolt types presented in Table 6.1 Standard Anchor Bolt Types are attached in Section E Appendix A1.

c. Minimum size of anchor bolts shall be 20mm dia. for structural columns and typical equipment and 16mm dia. for small pumps, crossovers, small pipe supports, guardrails, stair stringers, ladders, small access platform and for lightly loaded miscellaneous pipe supports with an operating load of up to 5.0 kN and height not exceeding 2.0 m.

d. For tanks operating above 93^0 C, pressurized tanks (API 620) and for tanks storing refrigerated products (API 625), the design of anchorage shall be by the MANUFACTURER. The interface with the foundation shall be clarified with CONTRACTOR as part of scope of works of the Tank MANUFACTURER.

All parties consent to this document being signed electronically - UP&T/A/OR/INT/2021/6593

Table 6.1 Standard Anchor Bolt Types

Anchor Bolt Type	Description
TYPE – A	**Un-sleeved bolt with hex nut head & anchor plate:** This type of bolt is applicable for all general structures and equipment where location tolerances are controlled by using robust precise methods.
TYPE – B	**Sleeved bolt with hex nut head & anchor plate:** This type of bolt is applicable for equipment where larger location tolerances are required
TYPE – C	**Sleeved bolt with forged steel hammer head and special bolt box at bottom:** This type of bolt may be used for equipment with anchor chairs, to facilitate equipment installation by allowing bolt movement/tolerance in both horizontal and vertical direction.
TYPE – D	**Sleeved through bolt with hex nut head & anchor plate:** This type of bolt is applicable for equipment supported on elevated concrete slabs.
TYPE – E and TYPE – F	**Un-sleeved hooked bolt:** Other type of anchor bolt such as hooked type (J, L etc.) may be used where VENDOR standards are followed and approved by COMPANY.

Table 6.2 Usage summary of Anchor Bolts Types

Application	Bolt Type				
	A	B	C	D	E / F
Steel structures (Pipe racks, Pipe supports, Platforms, Shelters, Equipment supporting structures, etc.)	X				
Vertical vessels and stacks	X	X			
Vertical Towers, tall equipment columns & Drums		X	X		
Horizontal vessels and exchangers	X	X			
Horizontal and vertical pumps	X	X			
Furnaces and heaters	X	X			
Compressor and vibratory equipment	X	X			
Anchorage to elevated concrete slabs and walls				X	
VENDOR standards approved by COMPANY					X

6.3 Materials

a. The material and grades for typical normal strength anchor bolts and its components based on their service are summarised in Table 6.3.

b. The material and grades for High strength bolts are summarised in Table 6.4.

c. Number of nuts to be used shall be as per Sections 6.4 and 6.5

d. Anchor bolts shall not be electroplated, and all anchor bolts shall be hot dip galvanised.

All parties consent to this document being signed electronically - DP&T/JOR/INT/2021/6593

e. Calculations for anchor bolt capacity considering ductility requirements as per relevant code (ACI/BS EN) shall be furnished by CONTRACTOR and submitted for COMPANY approval.

f. High strength bolts are permitted only in special cases where normal strength bolts cannot be accommodated in specific applications such as Tall columns/towers, etc.

g. Proper technical justification for use of high strength bolts shall be submitted for COMPANY approval

Table 6.3 Normal Strength and Normal Service Anchor Bolts - Materials

Parts of Bolt	Class of Bolt: F1 - Normal Service	
	ASTM Standards	BS EN Standards
Anchor Bolts / Shank	Steel ASTM F1554 Grade 36 Bolt threads shall be Class 2A conforming to ASME B1.1.	BS EN ISO 898-1 Grade 4.6 Bolt threads shall conform to BS 7419 with ISO large threads.
Nuts	Heavy hex nuts ASTM A563/A563M Grade A for Grade 36 Bolts	BS EN ISO 4034 Class 5 or BS 4190 Nut Grade 4 for Bolt Grade 4.6, Heavy hex nut threads shall be class 2B
Washers	Steel ASTM F436/F436M	BS EN ISO 7091 Grade 4.6 or BS 4320
Anchor plate/ end plate of sleeve	ASTM A36/A36M	BS EN 10025-1 to 6 Grade S275JR
Pipe for Sleeve	ASTM A53/A53M Grade B	BS EN 10216-1 Grade P265TR1 or TR2

Table 6.4 High Strength (HS) and Normal Service Anchor Bolts - Materials

Parts of Bolt	Class of Bolt: F1 - Normal Service	
	ASTM Standards	BS EN Standards
Anchor Bolts / Shank	ASTM F1554 Grade 105 Bolt threads shall be Class 2A conforming to ASME B1.1.	BS EN ISO 898-1 Grade 8.8 Bolt threads shall conform to BS 7419 with ISO large threads.
Nuts	Heavy hex nuts ASTM A553 Grade DH Nuts or ASTM A194 Grade 2H Nuts for Grade 105 bolts	BS EN ISO 4032 Class 10 or BS 4190 Nut Grade 10 for Bolt Grade 8.8 (see Note 1)
Washers	Steel ASTM F436/F436M	BS EN ISO 7089 200HV Grade 8.8
Anchor plate/ end plate of sleeve	ASTM A572/A572M	BS EN 10025-1 to 6 Grade S355JR
Pipe for Sleeve	ASTM A53/A53M Grade B	BS EN 10216-1 Grade P265TR1 or TR2
Notes 1. When galvanizing is applied to a bolt of grade 8.8, which requires the nut thread to be over-tapped, the nut grade used should be one grade higher than the bolt grade. For bolt grade 8.8 nut grade should be grade 10.		

All parties consent to this document being signed electronically - DP&T/SJDR/INT/2021/6593

Table 6.5 Low Temperature / Cold Service Anchor Bolts - Materials

Parts of Bolt	Class of Bolt: F2 - Low-temperature Service / Cold Service (-50^0 C or below)	
	ASTM Standards	BS EN Standards
Anchor Bolts / Shank	Steel ASTM A320-A320M Grade L7	Material Grades as per Table-4 & 10 of BS EN 10269 (See Note-1)
Nuts	Steel ASTM A194/A194M Grade 7	(See Note-2)
Washers	Steel ASTM F436/F436M	(See Note-3)
Anchor plate/ end plate of sleeve	ASTM A572/A572M	BS EN 10025-1 to 6 Grade S355JR
Pipe for Sleeve	ASTM A53/A53M Grade B	BS EN 10216-1 Grade P265TR1 or TR2

Notes:
1. BS EN ISO 898-1 is suitable for applications up to -50^0 C. For applications below -50^0 C, material grade for anchor bolt, nuts and washers shall be selected in consultation with specialist metallurgist/ fastener expert. For applications below -50^0 C, BS EN ISO 898-1 Section 1, Note 2 also refers to ASTM A320/A320M.

2. For applications below -50^0 C, BS EN ISO 898-2 Section 1, Note 2 refers to ASTM A320/A320M.

3. Use washer material equivalent to ASTM F436/F436M.

6.4 Bolts with Two Nuts

Bolts with two nuts shall be used under any of the following conditions:

a. All bolts designed to take tension

b. All steel structure bases designed as fixed bases

c. Vertical towers and columns

d. Sliding ends of exchangers and horizontal drums

e. Vibrating equipment

6.5 Bolts with One Nut

Bolts with one nut shall be used under any of the following conditions, unless two nuts are recommended by the MANUFACTURER.

a. Fixed ends of exchangers and horizontal drums with no uplift

b. Steel structure bases with no uplift

c. Static equipment

d. Vessel drums with no uplift

6.6 Washers

Since the base plates are typically provided with larger holes as a tolerance to position the anchor bolts, the washers provide uniform distribution of loads from base plate to anchor bolts. Generally, washers

All parties consent to this document being signed electronically - UP&T/SJ/OR/INT/2021/6593

have holes 1.5 mm larger than the anchor bolt diameter. Thickness of the washer shall be suitable for the forces to be transferred.

The washers are normally designated by type denoting the material, by shape and by dimensions. The following washer shapes are generally used based on their application.

a. Circular washers are suitable for applications where sufficient space exists and angularity permits.

b. Bevelled shaped washers are used with rolled profiles, where bevelled surface exists, typically for some rolled profiles.

c. Clipped washers are circular or bevelled for use where space limitations necessitate that one side be clipped.

d. Extra thick washers are to be used, where suitable for structural applications with oversized holes.

6.7 Sleeves

a. Sleeves are used with anchor bolts (Type – B, C & D) when a small movement of the bolt is desired after the bolt is set in concrete. This is generally required for one of the following two conditions:

   i. When precise alignment of anchor bolts is required during installation of structural columns and or equipment.

   ii. When anchor bolts are to be pretensioned in order to maintain the bolt under continuous tensile stresses during load reversal generated by high-pressure piping anchors, vibrating equipment, and/or wind on tall structures and process vessels.

b. Sleeves do not affect the tensile capacity of the headed anchor because the tension in the anchor is transferred to the concrete through the head and does not rely on the bond between the anchor and surrounding concrete.

c. Sleeves are normally made of either of the following materials:

   i. Thin-walled pipe, which may be smooth for non-structural applications.

   ii. Corrugated, where an interlocking action is desired.

d. Anchor bolt sleeves shall be designed to accommodate the pretension requirements of the design anchor bolts.

e. Sleeves of anchor bolts shall be filled with non-shrink grout after completion of installation of structure/equipment.

6.8 Protection and Corrosion

Special protection measures and material thickness allowance shall be used for anchor bolts exposed to a corrosive environment.

6.8.1 Bolt Protection

a. Anchor bolts shall be hot dip galvanized as per ASTM A153M Class C or BS EN ISO 1461.

b. Oversize tapping or re-tapping of nuts shall be required in accordance with ASTM A385M to permit anchor bolt assembly after hot dip galvanizing.

c. When high strength bolts are specified, precautions against embrittlement should be taken by the CONTRACTOR in accordance with recommended practice in ASTM A143.

All parties consent to this document being signed electronically - DP&T/SJDR/INT/2021/6593

d. Where there is a high risk of the anchor bolt being subject to chemical attack, the CONTRACTOR shall consult with materials specialists about suitable corrosion protection (ex. Phenolic epoxy coatings) and submit recommendation for COMPANY approval.

6.8.2 Corrosion Allowance for Bolts

a. The following shall be considered in anchor bolt design to account for corrosion allowance:

i. For tension case, the effective tensile stress diameter shall be reduced by 3mm.

ii. For shear case, the effective shear stress diameter shall be reduced by 3mm.

6.9 Non-standard Anchor Bolts

Anchor bolts larger than a certain diameter and high strength anchor bolts are defined as non-standard anchor bolts as per the following sections:

6.9.1 Large Diameters

a. The anchor bolt sizes which are not covered in the standard drawings in Appendix A1 shall be classed as large diameter anchor bolts. The dimensional details of such large diameter anchor bolts should be developed in line with the standard anchor bolt types and shall be submitted for COMPANY approval.

b. The following anchor bolt types based on their sizes are classified as large diameter bolts:

i. Anchor bolt types A and D, where the bolt diameters are greater than 72 mm.

ii. Anchor bolt type B, where the bolt diameters are greater than 42 mm.

iii. Anchor bolt type C, where the bolt diameters are greater than 64 mm.

iv. Anchor bolt type E and F, where the bolt diameters are greater than 48 mm.

6.9.2 High strength anchor bolts and non-standard washer plates

a. Anchor bolts as per ASTM F1554 Grade 105 or BS EN ISO 898-1 Grade 8.8 should only be considered where the use of normal strength bolts result in large diameter to resist high tensions and shear forces. For these cases high strength anchor bolts shall only be used with prior approval from COMPANY.

b. For higher loads the washer plate shall be non-standard and of higher thickness specific for bolt grade. The base plate and vertical stiffeners shall be checked for maximum tensile stress of the anchor bolts.

6.10 Bolt Projection

a. Bolt projection (P) above structural concrete shall be calculated as follows:

$$P = t1 + t2 + (n + 0.5)\ d$$

Where:

t1 = thickness of grout

t2 = thickness of base plate or frame or height of the anchor chair of vessel

All parties consent to this document being signed electronically - DP&T/JOR/INT/2021/6593

n = number of nuts

d = diameter of bolt

0.5 = allowance for one washer and a small projection beyond the nuts.

The bolt projection calculated shall be rounded off to next higher multiple of 10 mm.

b. The thread length required at the top of the anchor bolt must be sufficient to accommodate the required number of nuts and about ½ of the anchor bolt diameter projecting above the top nut. Normally a thread length of about '3 x bolt diameter from top of the anchor bolt' will be sufficient to provide some tolerance for errors in the elevation of the anchor bolt placement during construction.

6.11 Use of Standard Anchor Bolt Schedules

The standard anchor bolts schedules presented in Appendix A1 shall be used as much as possible and the designation of anchor bolts shall be consistently used across Project documentation. The following requirements shall be followed as minimum:

a. Ascertain bolt type and diameter and calculate the required bolt projection. Establish the bolt mark from the relevant anchor bolt standard and the bolt projection calculated shall be rounded off to next higher number multiple of 10 mm.

b. If the bolt projection exceeds the maximum standard projection stated in the standard schedule, then additional bolt details shall be added in the space provided on the schedule.

c. Anchor bolts shall be designated on the construction drawings as shown in Table 6.6 and the total number of bolts for each type with designation shall be summarized on Anchor Bolt Material Requisition.

Table 6.6 Anchor Bolts Designation

Anchor Bolt Designation:	A . FX . XX . P / N . xxx
A	Indicates anchor bolt type (A, B, C, D, E)
FX	F1 for normal service F2 for low-temperature service (Cold Service)
XX	Indicates bolt diameter (mm)
P	the bolt projection (mm), as calculated from Section 6.10
N	Number of nuts required
xxx	Embedment depth (mm) from top of pedestal

6.12 Anchor Bolts in Pedestal

The minimum requirements for arrangement of anchor bolts in pedestal shall be as follows:

a. Adequate vertical reinforcement shall be provided in pedestals and shall have sufficient anchorage on either side of the intersecting point of the concrete break out cracking plane with the reinforcement in order to transfer tension from the anchor bolts to the pedestal reinforcement.

All parties consent to this document being signed electronically - TP&T/JOR/INT/2021/6593

Typical reinforcement arrangement for resisting anchor bolt tension in rectangular pedestals is shown in Figure 6.2 and in Octagonal pedestals is shown in Figure 6.3

b. Anchor bolts shall not be extended to the foundation base slab, the pedestal shall be utilised to provide the full anchorage. However, in some cases this may not be practical. If the anchor extends into the mat, the concrete breakout strength in the mat must be checked with the effective embedment depth measured from the top of the mat assuming reinforcement is not adequately lapped to transfer the tension, see Figure 6.1 for typical cases where the anchor bolt extends into mat.

c. Where sleeved anchor bolt is used, it is not recommended to extend the anchor bolts and sleeves into the Mat/foundation base slab from constructability point of view.

Figure 6.1 Anchor extended into mat / foundation base slab

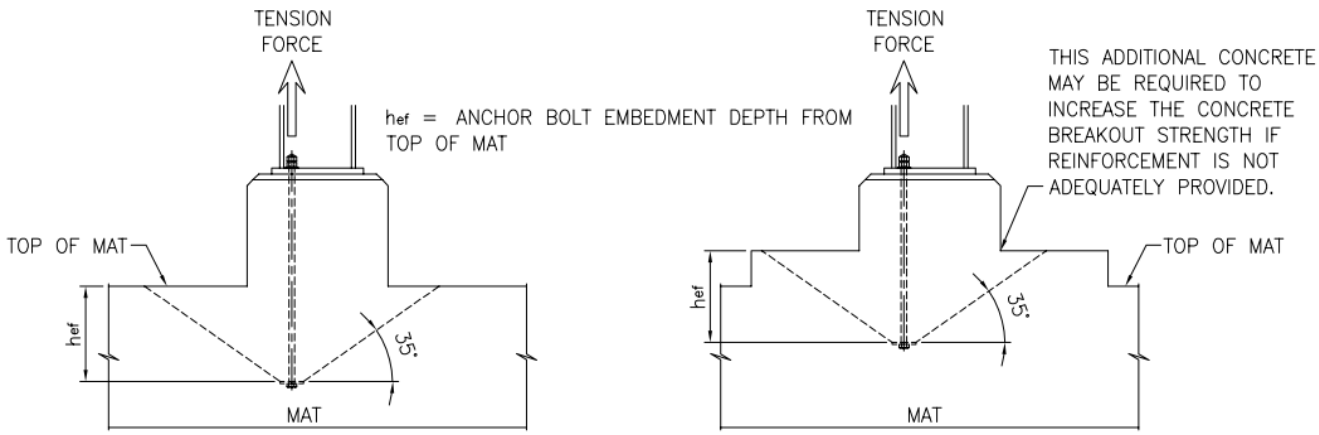

All parties consent to this document being signed electronically - DP&T/A/OR/INT/2021/6693

Figure 6.2 Reinforcement for Resisting Anchor Bolt Tension in Square and Rectangular Pedestals

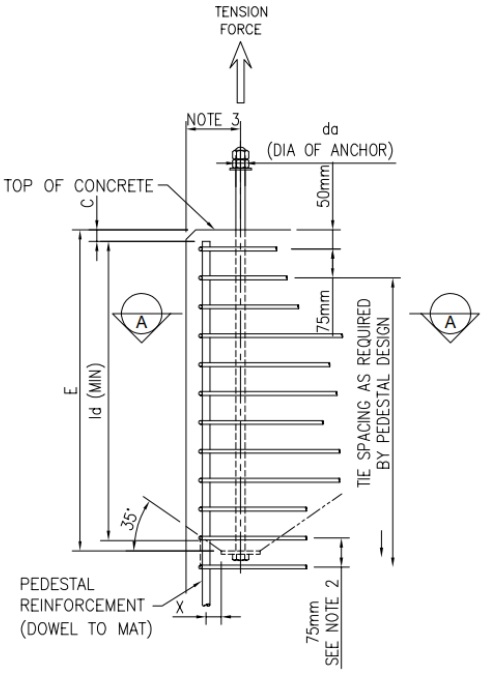

E = ld + C + x tan(35°)
ld = DEVELOPMENT LENGTH

NOTES:–

1) PROVIDE INTERIOR TIES IF REQUIRED PER ACI 318.

2) A MINIMUM OF 2 SETS OF TIES AT 75mm SPACING CENTRED AT THE BEARING SURFACE OF THE ANCHOR HEAD.
FOR HIGH–STRENGTH ANCHORS ONLY.

3) FOR BOTH TORQUED AND UNTORQUED BOLTS, DISTANCE OF ANCHOR BOLT CENTRE TO EDGE OF CONCRETE, SHALL BE AS PER TABLE 6.7 OF AGES–SP–01–004.

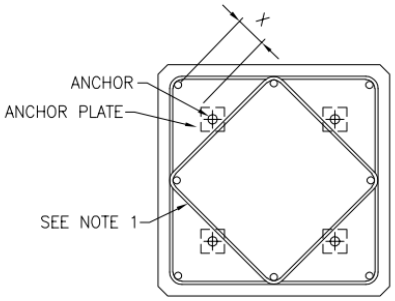

A SECTION
SCALE 1:10

All parties consent to this document being signed electronically - DP&T/A/OR/INT/2021/0693

Figure 6.3 Reinforcement for Resisting Anchor Bolt Tension in Octagonal Pedestals

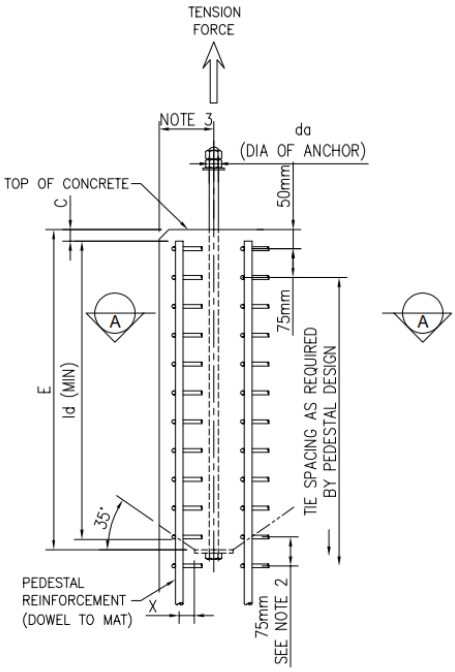

E = ld + C + x tan(35°)
ld = DEVELOPMENT LENGTH

NOTES:–

1) VERTICAL REBARS AND TIES ON THE INSIDE OF THE ANCHOR CIRCLE ARE REQUIRED ONLY IF VERTICAL REBARS AND TIES ON THE OUTSIDE OF THE ANCHOR CIRCLE ARE NOT SUFFICIENT FOR REINFORCING THE CONCRETE FOR ANCHOR LOADS.

2) A MINIMUM OF 2 SETS OF TIES AT 75mm SPACING CENTRED AT THE BEARING SURFACE OF THE ANCHOR HEAD. FOR HIGH–STRENGTH ANCHORS ONLY.

3) FOR BOTH TORQUED AND UNTORQUED BOLTS, DISTANCE OF ANCHOR BOLT CENTRE TO EDGE OF CONCRETE, SHALL BE AS PER TABLE 6.7 OF AGES–SP–01–004.

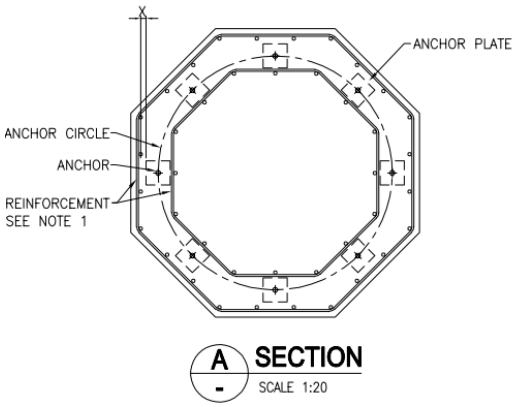

All parties consent to this document being signed electronically - DP&T/SJDR/INT/2021/6593

6.13 Minimum Spacing of Anchor Bolts

a. Minimum anchor bolt spacing shall be not less than 7 x bolt diameter for bolts with or without sleeves.

6.14 Pedestal Edge Distances

a. Minimum distance from centreline of anchor bolt to pedestal edge shall be as per Table 6.7.

b. The clear distance between bottom washer plate in anchor bolt types A, B & D shall be minimum 75mm.

c. Minimum distance from edge of base plate to edge of concrete shall be 100mm.

d. Minimum distance from edge of the grout to edge of concrete shall be 75mm.

Table 6.7 Minimum anchor bolt to concrete pedestal edge distance

Foundation Type		Without Sleeve	With Sleeve
Machine foundation	U	Maximum of ($4d_a$ or 150mm)	Maximum of ($4d_a$ or 150mm) + $0.5(d_s-d_a)$
	T	Maximum of ($6d_a$ or 150mm)	Maximum of ($6d_a$ or 150mm) + $0.5(d_s-d_a)$
Structural foundation	U	Maximum of ($4d_a$ or 125mm)	Maximum of ($4d_a$ or 125mm) + $0.5(d_s-d_a)$
	T	Maximum of ($6d_a$ or 125mm)	Maximum of ($6d_a$ or 125mm) + $0.5(d_s-d_a)$
Other miscellaneous foundations	U	$4d_a$	$4d_a + 0.5(d_s-d_a)$
	T	$6d_a$	$6d_a + 0.5(d_s-d_a)$
U = Un-torqued; T = Torqued; d_a = anchor bolt diameter; d_s = anchor sleeve diameter			

6.15 Construction Notes for Location and Tolerance of Anchor Bolts

a. A template of a suitably robust material shall be provided to locate the anchor bolts in their correct position and alignment. This is particularly relevant when bolts are located on a circular arrangement.

b. Anchor bolt sleeves shall be capped and/or filled with nonbonding mouldable material to keep out water, concrete, and debris during the placement of concrete.

c. Wet dipping (placement after concrete pouring) of anchor bolts shall not be permitted.

d. Anchor bolts shall not be heated and bent to facilitate equipment installation.

e. Bolt Type A, E & F provide no allowances for setting out or location tolerance.

f. Bolt Type B provides limited setting out tolerance by the bolt being aligned within the tube.

g. The portion of the anchor bolt projecting above the top of the structural concrete level shall be protected from corrosion by duct tape, foam pipe insulation, or similar, prior to erection of equipment or steelwork.

h. Bolt Type C, bolt box is to be located centrally on the bolt circle diameter (BCD) with the long side of the washer plate slot tangential to the BCD. Anchor bolts are to be removed and the bolt box

All parties consent to this document being signed electronically - UP&T/SJ/OR/INT/2021/6593

plugged before fixing the bolt box rigidly in position and placing concrete. Tolerance is provided along the BCD within the length of the slot in the washer plate and should be tilted slightly normal to the BCD. Refer Appendix A2 for Bolt Type C installation procedure.

i. Unless otherwise specified in the Contract Documents, anchor bolt shall be installed in accordance with the tolerances shown in Table 6.8. The term “bolt group” used in Table 6.8 is defined as the set of anchor bolts for a single fabricated steel shipping piece, or a single piece of equipment or skid.

Table 6.8 Tolerances for anchor bolt embedment

Measurement	Tolerances
Anchor bolt projection	-0 mm, +15 mm
Anchor Bolt position with respect to design position	± 2 mm
Centre of bolt group	± 2 mm
Anchor bolt vertical plumbness	± 1:100

6.16 Post - Installed Anchor Bolts (Mechanical / Chemical)

a. Post-installed anchors (mechanical fasteners of expansion type or chemical fasteners with resin) may be used for the attachment of ancillary structures to concrete such as ladders, handrails, minor pipe supports, cable tray supports, etc., where approved by COMPANY.

b. The type of post-installed anchor to be used shall be subject to COMPANY approval. In general, chemical anchors are recommended for use, except in overhead applications

c. The minimum edge distances for post-installed anchor bolt shall be in accordance with ACI 318.

d. Post-installed mechanical anchor bolts used for sustained structural loads shall be seismically qualified in accordance with ACI 355.2.

e. The post installed anchor shall be installed only after concrete has gained the full design compressive strength.

f. Post installed anchors shall not be used when exposed to temperatures above 60^0 C.

6.17 Parameters for Design of Anchor Bolts

a. A non-ductile anchor design would pose a risk for sudden loss of capacity of the anchorage system resulting from a brittle failure of the concrete and hence not recommended.

b. A ductile anchorage design is recommended, wherein the yielding of the anchor controls the failure of the anchorage system. A ductile design is achieved when the anchoring capacity of the concrete is greater than that of the embedded anchor in tension, in shear or in a combination of both. This is a strength requirement and is independent of the magnitude of the applied loads.

c. Strength of the anchorage system shall be based on the following failure modes:

   i. Anchor bolt steel strength in tension and shear.

   ii. Concrete break-out strength of anchor in tension.

All parties consent to this document being signed electronically - DP&T/SJ/DR/INT/2021/6593

iii. Pull-out strength of anchor in tension.

iv. Concrete side-face blowout strength of headed anchor in tension.

v. Concrete break-out strength of anchor in shear.

vi. Concrete pryout strength of anchor in shear.

d. The combined interaction ratio of tension and shear for anchor bolts shall be less than or equal to 1.2 for both ultimate limit state and allowable stress methods.

e. The allowable steel tensile stress, Ft = 120 MPa and allowable steel shear stress Fv = 80 MPa shall be considered unless otherwise approved by COMPANY or specified in Project documents.

f. To arrive at ultimate capacity of anchor bolt, a factor of 1.5 shall be used (ultimate capacity = 1.5 x allowable capacity) unless otherwise approved by COMPANY or specified in Project documents.

7 GROUTING

7.1 General

a. Grout shall be applied between the concrete foundation/pedestals and the base plates of all steel structures, equipment, concrete precast elements and as required on construction drawings or specifications in order to achieve adequate transfer of loads to the foundation/ pedestal.

b. Grout shall have a design compressive strength greater than or equal to the strength of the foundation concrete.

c. Unless specified otherwise in design drawings, the minimum grout thickness shall be 25 mm and the maximum shall not exceed 50 mm in a single pour.

d. Shoulder of grout from edge of base plate (if provided) shall not be extended by more than the thickness of the grout.

7.2 Selection of Grout Types

Selection of grout types shall be in accordance with Table 7.1 or as per MANUFACTURER / SUPPLIER requirements, whichever is more stringent.

All parties consent to this document being signed electronically - DP&T/JOR/INT/2021/6593

Table 7.1 Grout Types for Equipment and Structures

Equipment / Structure		Cement-based non-shrink grout	Epoxy non-shrink grout
Dynamic Equipment foundations	Driver horsepower	< 375 kW (500 HP)	≥ 375 kW (500 HP)
	Rotating equipment speeds	≤ 3600 RPM	> 3600 RPM
	Combined weight of (machine, driver, base plate)	≤ 2268 kg	> 2268 kg
	All reciprocating machinery with driver rating	< 37kW (50 HP)	> 37 kW (50 HP)
All other foundations including non-dynamic equipment foundations		a. Vessels and heat exchangers. b. Equipment with cast bases. c. Equipment on base frames with cover plates. d. Structural column base plates. e. Small equipment with flat base plates	a. All supports subject to cyclic loading. b. All sole plate mounted equipment.
Notes: Epoxy non-shrink grout shall not be used if the operating surface temperature local to the grout is greater than 60°C			

7.3 Materials

7.3.1 Cement based non shrink grout

a. Cement based non shrink grout shall be premixed, pre-proportioned, factory packaged product consisting of a mixture of cement, sand, and inert materials and shall be in accordance with ASTM C1107 / C1107M Grade B or C.

b. Metal-oxidising or gypsum-forming non shrink grout is not permitted.

c. Grout shall not contain metallic substances, aluminium powder, measurable amounts of water-soluble chlorides or other substances that may be potentially harmful to concrete or steel reinforcement.

d. No admixtures shall be added to the grout without the approval of the MANUFACTURER.

e. The amount of potable water added to the premixed dry product shall be in strict accordance with the MANUFACTURER's printed instructions.

f. Cement-based non-shrink grout shall meet the following requirements:

   i. Minimum compressive strength shall be 40 N/mm^2 at 7 days and 60 N/mm^2 at 28 days when tested using 50mm cube specimens in accordance with ASTM C109/C109M.

   ii. Free of oxidizing catalysts.

   iii. Free of inorganic accelerators, including chlorides.

All parties consent to this document being signed electronically - DP&T/SJDR/INT/2021/6593

iv. Non-staining.

v. The water used for mixing, surface soaking and curing shall be free of oils, acids, alkaline, organics and other deleterious materials. The water shall comply in all respects with the requirements of ACI 318, ASTM C94/C94M, and ASTM C1602/C1602M or BS EN 1008.

vi. Bleeding of grout is not allowed.

vii. Grout shall have a minimum working time of 90 minutes.

g. Equipment base plates and base plates for structural columns including that of piperacks shall be provided with high strength free flow non-shrink cementitious grout. The grout shall pass through a flow cone per ASTM C939 (fluid consistency) in less than 27 seconds.

7.3.2 Non-Shrink Epoxy Grout

a. Non shrink epoxy grout shall be a pre-proportioned, factory packaged product consisting of specially formulated resin, hardener, and aggregate and shall meet the following requirements:

i. The minimum compressive strength shall be 65 N/mm^2 at 24 hours and 95 N/mm^2 at 7 days when tested using 50 mm cube specimens in accordance with ASTM C579 Method B.

ii. Epoxy grout shall have a minimum working time of 45 minutes at 24 °C.

iii. The average coefficient of thermal expansion shall be 2.94 x 10^{-5} / °C as per ASTM C531.

iv. The finished epoxy grout product shall be tested for flowability and bearing area in accordance with ASTM C1339/C1339M.

v. The water used for grout work, including but not limited to, the washing and pre-wetting/cooling of surfaces in contact with grout and the curing and mixing of grout materials shall comply in all respects with the requirements of ACI 318, ASTM C94/C94M, and ASTM C1602/C1602M or BS EN 1008.

vi. Average linear shrinkage shall be 0.017% per ASTM C531.

vii. Maximum creep shall be 2.05 x 10^{-3} mm/mm, tested at 60 °C with a 2.8 N/mm^2 applied vertical load, in accordance with per ASTM C1181.

viii. Minimum bond strength of epoxy grout to concrete shall be 14 N/mm^2 per ASTM C882.

ix. Shall have non-rusting, non-staining property and non-shrink dimensional stability.

x. Shall have flowable placing consistency and full self-levelling characteristics.

xi. Grout shall be resistant to chemical attack of the materials that may drip on its surface.

b. The finished product shall have a flow time as recommended by the MANUFACTURER and a bearing area of 85 percent or greater when tested in accordance with ASTM C1339.

7.4 Installation

7.4.1 General

a. The Grout MANUFACTURER'S technical representative shall select the appropriate materials considering the conditions of use and EQUIPMENT MANUFACTURER/ SUPPLIER's request if any and this specification.

All parties consent to this document being signed electronically - UP&T/SJ/OR/INT/2021/6593

b. The MANUFACTURER'S technical representative shall prepare the installation procedures for each product. In addition, the technical representative may be called to the field office for a pre-grouting conference to assure that all grouting steps are followed in accordance with the MANUFACTURER'S instructions. The technical representative shall remain at the jobsite until the CONTRACTOR and COMPANY are assured that the correct procedures are being followed and the warranty is not in jeopardy.

c. All materials shall be stored in accordance with the MANUFACTURER recommendations. Cement based non shrink grout and cement intended to use in dry pack shall be in sound dry bags. Any material that becomes damp or otherwise defective shall be immediately removed from the site.

d. All grout shall be tested in an on-site mock-up of foundation plates to be grouted. Form release agent shall be placed on the underside of the plate to allow removal of the base plate after grout hardens. Surface of the cured grout when base plate is removed shall show a minimum of 85% bearing area in accordance with ASTM C1339/C1339M, with no evidence of foaming, segregation or voids. Mock-up shall be constructed to simulate headbox, mixing equipment and curing methods to be used on actual pour. The CONTACTOR and COMPANY'S representative shall witness field performance test.

7.4.2 Preparation

a. Foundation preparations prior to grouting shall be in accordance with the MANUFACTURER written instructions.

b. Concrete foundations shall be at least ten days old prior to surface preparation.

c. The surface of the foundation under the base plate or equipment to be grouted shall be roughened to the level of sound fractured, coarse aggregate. Remove the weak upper layer of the concrete, damaged concrete, harmful matter and any oil-soaked concrete areas. Prior to grouting, loose concrete or dust shall be removed, preferably by compressed air. Anchor bolt sleeves shall be cleaned out to allow the ingress of grout into the sleeve. After cleaning, the foundation surface shall be tightly covered to keep dust and oil free.

d. Metal surfaces in contact with the grout shall be clean and free of oil, grease, and other foreign substances.

e. Base plate surfaces in contact with epoxy grout shall be grit blasted to white metal and coated with a catalysed epoxy primer compatible with the epoxy grout.

f. Foundation surface shall be protected from contamination by applying protective sheeting.

g. Anchor bolt exposed threads shall be wrapped with duct tape to prevent adherence of epoxy grout.

h. Base plates and equipment bases must be uniformly supported prior to grouting in order to eliminate sag and distortion. Equipment bases should be levelled using both anchor bolts and jackscrews or levelling plates.

i. For vibrating equipment that is to be epoxy grouted, foundation bolt sleeves or pockets shall be filled with cement based non shrink grout, after the foundation concrete has set and prior to grouting the equipment base plate.

j. All levelling plates shall be set to the proper elevation. The number and type of levelling plates shall be determined in accordance with the recommendations of the equipment manufacturer or other project documents.

All parties consent to this document being signed electronically - DP&T/SJ/DR/INT/2021/6593

k. All jackscrews must rest on a steel plate embedded in or grouted to the concrete and not on the concrete directly.

l. The concrete surfaces, on which cement based non shrink grout is to be placed shall be soaked with clean water for 24 hours. Just prior to grouting, the water shall be removed leaving only a damp film. All standing water shall be removed from anchor bolt sleeves.

m. Surfaces, on which epoxy grout is to be placed, shall be completely dry before grouting, and shall be in accordance with the recommendations indicated in the technical data of the proprietary systems.

n. Metal parts that should not bond to the grout (like jack screws of reciprocating machinery and parts of the foundation bolts) are to be sealed with tape or grease prior to grouting.

o. Cement, sand aggregate or admixtures shall not be added unless specified by the MANUFACTURER.

7.4.3 Formwork

a. Formwork shall be provided for grout and shall be compatible with the method of placing grout specified herein. It shall remain in place for a minimum of 24 hours. All formwork shall be built of materials with adequate strength, securely anchored and shored to resist grout placement forces

b. Forms shall be designed for rapid, continuous, and complete filling of space to be grouted.

c. Joints shall be caulked or sealed with tape to prevent leakage.

d. The forms shall be coated with a bond breaker recommended by the grout manufacturer to prevent grout adherence and absorption. Oil or liquid wax is prohibited.

e. Unless otherwise shown on the construction drawings, the entire area under the base shall be grouted.

f. Forms shall not be butted against a base plate or equipment base, but shall allow at least 25 mm of space all around.

g. The top of the forms shall extend a minimum of 25 mm above the bottom of the base plate being grouted. On the pouring side, the forms shall be left a minimum of 50 mm away from the base plate.

h. The top of the forms on the pouring side shall be sufficiently high, but no less than 150 mm.

i. Forms shall have a chamfer strip attached where a chamfered edge is required.

j. Top of grout level shall not exceed the bottom level of baseplate and shall be sloped towards the edge of the concrete base.

7.4.4 Wedges and Shim Plates

Adequate wedges and/or shim plates shall be used for levelling steel structures and equipment, prior to grouting, to which the following shall apply:

a. Shims that are used for levelling works shall be same grade of steel as base plate or stainless steel to avoid corrosion.

b. Shims under steel structures and equipment shall be of a machined type.

c. COMPANY approval is required for permanent retaining of the shims and levelling plates of a machined type without removal.

All parties consent to this document being signed electronically - DP&T/JOR/INT/2021/0693

d. The shim and levelling plates placed on the foundation shall be embedded in a mortar bed such that the top of the shim or levelling plate is level in all planes.

e. The shim to be placed on the foundation shall be embedded in a mortar bed such that the top of the shim is levelled.

f. Shim plates shall have rounded corners with 6mm radius.

g. Shim plates shall be installed in such a manner that they are fully embedded and surrounded by the grout to be installed later; minimum cover to shim sides shall be 50 mm.

h. Load per shim pack of levelling plate shall not exceed 7 N/mm^2 under the worst loading condition. In this case, the grout shall be considered as a filling material only when calculating the aforementioned bearing stress.

i. Wedges are restricted to minor steel structures, supports, etc. and shall be removed and the resulting voids filled with grout.

7.4.5 Mixing

a. Grout shall not be mixed in quantities larger than required to be placed during the working time specified.

b. All cement-based grout shall be machine mixed in a mixer with moving paddles inside a drum, not in a concrete mixer with fins attached to a rotating drum.

c. The grout shall not be mixed by hand.

d. All epoxy grout components shall be conditioned to a temperature range between 21 °C and 29 °C prior to mixing, or recommended temperature ranges provided by the grout MANUFACTURER. Mixing resin and hardener shall then be put into a clean low speed mortar mixer and, if required, the specified aggregate added. Nothing else shall be added to the mixture. Air entrainment must be avoided.

e. Mixing shall be adjacent to the area being grouted, with sufficient manpower and equipment available for rapid and continuous mixing and placing.

f. All mixing equipment shall be clean, free of oil, grease, and other foreign substances. Before mixing a batch of grout, any remaining grout from the previous batch shall be cleaned out. Re-tempering of leftover grout is not allowed.

g. Mixing of grout materials shall be in strict accordance with the MANUFACTURER'S instructions.

7.4.6 Placing

a. Grout has a limited working time after mixing. This working time shall be in strict accordance with the MANUFACTURER'S printed instructions. The placing of grout shall be performed only during the specified working time and any unused grout remaining beyond this time shall be discarded.

b. When placing grout, CONTRACTOR shall follow the temperature range of the MANUFACTURER'S instructions for the foundation, baseplate and grout material. Temperatures shall be checked using a surface thermometer, and, shall be maintained for the minimum curing period specified in the MANUFACTURER'S instructions.

c. Grout shall be placed from one long side of an equipment base to the other in one direction only. The grout shall be poured into a movable head box having an inclined lane to direct the grout beneath the equipment base in a manner which minimizes trapped air and bubble formation. The

All parties consent to this document being signed electronically - DP&T/SJ/DR/INT/2021/6593

head box should be about 300 x 300 x 300 mm to allow large volumes of grout to be poured continuously. Alternatively, construct a fixed slanted form extending about 300 mm above the foundation top along the pour side.

d. The use of vibrators is not permitted. The use of steel straps is permitted to move grout into position, but chaining is not permitted because of air entrapment between links. All trapped pockets shall be vented to allow full penetration of the grout.

e. Pumping grout is permitted and may eliminate the requirement for a head box.

f. Grout placing shall be continued until it oozes out along the entire perimeter and up through every interior air relief hole (6 mm minimum diameter) and grout hole. An exception occurs when grouting such equipment as pumps having an elevated interior baseplate. In these situations, fill under the entire equipment base to the top of the exterior base plate and then stop grouting for a short period of time to allow the grout to seal the periphery. Complete the grouting through one of the interior grout holes.

g. If a second pour is required for epoxy grout, it shall not commence until the first pour shall be fully cured, and its peak curing temperature has started to reduce.

h. Placing of grout by method of dry packing is not permitted for any works.

i. The shims and wedges shall be placed as per the recommendations presented in Section 7.4.4.

j. Expansion joints shall be spaced no greater than 1.5 meters or as indicated on the design drawings for epoxy grout.

k. Expansion joints shall be made from closed-cell neoprene or polyethylene foam board, having a minimum thickness of 25mm unless otherwise noted on drawings.

l. Expansion joints shall be fixed into position to prevent movement and shall be sealed at formwork and at the concrete base to prevent epoxy grout from passing around or underneath the joint during placement.

m. Vibration from nearby operations may transmit into the foundation of the structure being grouted. This may cause bleeding, settlement, affect setting time, strength, or create a hidden fracture plane. Vibration should be detected by observing the surface of a shallow pan of water set on the structure to be grouted.

n. The CONTRACTOR'S representative shall determine if vibration from nearby operations warrants shutdown of such operations until the grout has taken its final set.

o. For vibrating equipment that is to be epoxy grouted, foundation bolt sleeves or pockets shall be filled with cement-based non shrink grout, after the foundation concrete has set, prior to setting the equipment.

p. Vertical support for equipment having a structural steel base frame and a stiffened cover plate is provided by grouting under the base frame. Compliance with the installation procedure established herein will preclude unacceptable voids. Incidental voids under the cover plate are not detrimental. It is important that the cover plate be sealed by grout against foreign elements.

q. When recommended by equipment MANUFACTURER, the skid frame cavity (between structural members of the bases) for rotating and vibrating equipment shall be filled with cement-based non shrink grout through grout holes in the bases after the epoxy grout under the bottom of skids or base plates has hardened. The grout and vent holes shall then be sealed to encapsulate the concrete and the equipment bases.

All parties consent to this document being signed electronically - DP&T/SJ/DR/INT/2021/0693

r. The grout shall fill all voids between the base plate or sole plate and the foundation, shall have full surface contact, be thoroughly compacted and free from air pockets.

s. Exposed cement-based grout surfaces shall be coated (with an epoxy-based product) if future contamination with lubricants is possible.

t. The CONTRACTOR shall develop a detail to ensure an effective seal is achieved between grout and base plate. The grout surface shall slope away from the base plate.

u. The placing of cement-based grout shall commence not later than 15 minutes after completion of the mixing.

v. Grout shall not be placed when ambient temperature exceeds 40°C.

w. If the grouting is to be done in extreme hot weather conditions, CONTRACTOR shall prepare procedures based on the MANUFACTURER instruction and applicable standards and submit for COMPANY approval.

7.4.7 Finishing and Curing

a. Finishing and curing shall be in strict accordance with the MANUFACTURER'S printed instructions.

b. Cement-based non-shrink grout shall be protected from extreme drying conditions by covering all exposed grout surfaces with continually wetted burlap or waterproof paper for a minimum of 3 days following grouting.

c. Epoxy grout cannot be trimmed after set. It must be left at the finished level with required chamfer strips built into the forms. Further finishing will require grinding after the curing period is complete.

d. Exposed edges shall be protected against damage during the curing period.

e. Where shims are to be removed, or if wedges were used, they shall be removed after 3 days. On removal of the shims or wedges, the resultant void spaces shall be filled with same type of grout.

f. Exposed expansion joints shall be sealed with the grout MANUFACTURER'S recommended sealant.

g. Apply finish coating over grout holes and vent holes after grout has set.

7.5 Testing

a. Cement based non shrink grout shall be tested at least once per day in accordance with ASTM C109.

b. Compressive strength testing of epoxy grouts shall be tested at least for a batch of grout or once per day in accordance with ASTM C579, Method B.

c. On-site testing will be in accordance with ADNOC On-Site Material Sampling and Testing Laboratory Specification.

d. For each test, prepare six number of cubes for cement-based grouts (3 no. each to be tested at 7 days and 28 days) and six number of cubes for epoxy grouts (3 no. each to be tested at 24 hours and 7 days). During this period the test specimens shall have been completely protected against drying, evaporation, carbonation and exposure to temperatures greater than those stated as accepted by grout MANUFACTURER.

e. Grout working time shall be determined by testing per ASTM C953.

All parties consent to this document being signed electronically - UP&T/A/OR/INT/2021/6593

f. The CONTRACTOR shall advise the COMPANY and testing laboratory when grout will be placed and shall cooperate fully with the testing laboratory in the making cubes and testing on-site.

g. The CONTRACTOR is responsible for providing the appropriate laboratory test results performed on the grout materials, including the "Affidavit of Compliance" required in Section 12, to substantiate grout properties and its conformance with this Specification / MANUFACTURER'S requirements.

7.6 Handling

7.6.1 Packaging and Shipping

a. Cement-based non shrink grout and epoxy grout aggregate shall be delivered to the jobsite in sound, dry bags.

b. Epoxy non shrink grout liquids, hardener and resins shall be delivered in sealed containers.

c. Products stored beyond six months prior to shipping shall not be shipped.

7.6.2 Preservation and Storage

a. Non shrink grout material shall be stored and handled in accordance with the MANUFACTURER'S recommendations.

b. All grout material shall be stored in a dry, weatherproof shelter.

c. Materials shall be protected to safeguard against all adverse environments, such as: humidity, moisture, rain, dust, dirt, sand, mud, salt air, salt spray, and sea water.

d. Cement-based grouting materials which have become damp or air set shall not be used.

e. Materials shall be protected to withstand extended period of storage at the jobsite. The total job storage time for non-shrink grout (proprietary system) shall be limited to ten months.

7.7 Disposal

For epoxy grouts all materials shall be converted to solid waste for proper disposal. The procedure for making solid waste in any type of hardener container is as follows:

a. Mix the hardener with the resin. This mixture is considered inert.

b. Pour excess hardener/resin mixture into the hardener container.

c. Close container and shake until excess hardener mixes with excess hardener/resin mixture. This final mixture in the hardener container is considered inert for proper solid waste disposal.

8 ADDITIONAL SPECIFIC REQUIREMENTS

Not applicable.

All parties consent to this document being signed electronically - DP&T/SJ/DR/INT/2021/6593

SECTION C – OTHER REQUIREMENTS

9 QUALITY PLANS

9.1 General

a. Quality plans shall address all aspects related to local conditions, such as climatic conditions, backup facilities, spare parts, transport possibilities, storage facilities, quarries, local Manufacturer/Suppliers, test facilities (field laboratory).

b. Quality Management Systems shall comply with the applicable requirements of BS EN ISO 9001 "Quality Management Systems- Requirements" and BS EN ISO 9004, "Quality management – Quality of an organization – Guidance to achieve sustained success". Written quality plans and procedures shall be submitted for COMPANY approval.

c. Materials should be obtained from the same source(s) throughout the work (including both trial and production mixes).

9.2 Inspection, Testing and Reporting

a. Inspection and Test Plans (ITPs) identifying the tests, frequencies, acceptance criteria, and responsibilities shall be prepared as part of the quality plan. COMPANY will mark-up CONTRACTOR ITPs for COMPANY associated monitor, witness or inspection hold points

b. A reporting system of Quality Control Records (QCRs) shall be part of the quality plan.

c. The reporting system shall record all results obtained during the testing.

d. Weather conditions shall be recorded in the quality results.

e. The proposed ITPs and QCRs shall be included in the Quality Plan.

f. Standard forms of inspection and test plans shall be used as a basis for the development of the ITPs and QCRs supplemented by the requirements of the specifications for the work to be executed.

g. COMPANY reserves the right to make inspections of the source of supply of materials.

h. Prior to supply of any material to site the CONTRACTOR shall obtain COMPANY approval by submitting necessary documentation such as test certificates, source of supply, date of manufacture, etc.

9.3 Quality Control and Assurance

a. CONTRACTOR shall be solely responsible for quality control of all materials and workmanship. The quality system shall provide for the planned and systematic control of all quality-related activities performed during design and construction. Implementation of the quality system shall be in accordance with the Project Agreement, CONTRACTOR's approved Quality Manual and Project Specific Quality plan.

b. CONTRACTOR shall ensure that SUB-CONTRACTORs, SUPPLIERs and MANUFACTURERs have in place a QA/QC program which clearly establishes the authority and responsibilities of those responsible for the quality system. Persons performing quality functions shall have sufficient and well-defined authority to enforce quality requirements that they initiate or identify and to recommend

All parties consent to this document being signed electronically - UP&T/A/OR/INT/2021/6593

and provide solutions for quality problems and thereafter verify the effectiveness of the corrective action.

c. Quality System and Quality Control requirements shall be identified and included in CONTRACTOR's Purchase documentation. Based on these requirements, the SUB-CONTRACTORs, SUPPLIERs and MANUFACTURERs will develop QA/QC programs which shall be submitted to COMPANY and CONTRACTOR for review and concurrence. The SUB-CONTRACTOR's, SUPPLIER's and MANUFACTURER's QA/QC programs shall extend to SUB-SUPPLIERs.

d. CONTRACTOR shall submit certified reports of all tests as soon as the tests are completed satisfactorily.

e. COMPANY reserves the right to inspect or to conduct a quality audit of materials, installation and workmanship standards and shall have unrestricted entry to the construction site and to testing laboratories to witness any or all tests. SUB-CONTRACTORs, SUPPLIERs and MANUFACTURERs, within 30 days after award but prior to the pre-inspection meeting, shall provide CONTRACTOR and COMPANY with a copy of its Inspection & Testing Plan for review and inclusion of any mandatory CONTRACTOR and COMPANY witness or hold points.

f. COMPANY may reject improper, inferior, defective, or unsuitable materials, installation and workmanship. All materials and workmanship rejected shall be replaced by CONTRACTOR as directed by the COMPANY.

10 SUB-CONTRACTORS AND SUPPLIERS

a. CONTRACTOR shall assume unit responsibility and overall guarantee for the fabrication of anchor bolts and associated items.

b. CONTRACTOR shall transmit all relevant purchase order documents including specifications to his SUB-CONTRACTORs and SUPPLIERs.

c. It is the CONTRACTOR'S responsibility to enforce all Purchase Order and Project Specification requirements on its SUB-CONTRACTORS and SUPPLIERS.

d. CONTRACTOR shall submit all relevant SUB-CONTRACTOR and SUPPLIER drawings and engineering data to COMPANY.

e. CONTRACTOR shall obtain and transmit all SUB-CONTRACTOR and SUPPLIER warranties to COMPANY.

f. All drawings and engineering data submitted to the COMPANY shall be in the English language, and in metric units.

11 MATERIAL CERTIFICATIONS

CONTRACTOR is responsible for the supply of all materials conforming to the relevant codes and standards, including all supply of material certificates/testing.

12 DOCUMENTATION / MANUFACTURER DATA RECORDS

a. CONTRACTOR shall submit for COMPANY approval the drawings, documentation or information as listed in the individual Material Requisitions and Purchase Orders.

All parties consent to this document being signed electronically - UP&T/A/OR/INT/2021/6593

b. CONTRACTOR shall maintain a complete up-to-date set of construction drawings at the jobsite.

c. Mutual agreement on scheduled submittal of drawings and engineering data shall be an integral part of any formal Purchase Order.

d. Comments made by COMPANY on drawing submittals shall not relieve CONTRACTOR of responsibility to meet the requirements of ADNOC General Specifications. Comments by COMPANY shall not be construed as permission to deviate from requirements of the Purchase Order unless specific and mutual agreement is reached and confirmed in writing.

e. Each drawing shall be provided with a title block in the bottom right hand corner incorporating the following information:

   i. Official trade name of the company.

   ii. CONTRACTOR's drawing number.

   iii. Drawing title.

   iv. A symbol or letter indicating the revision number.

f. Revisions to drawings shall be identified with symbols adjacent to the alterations. A brief description of each revision shall be given and, where applicable, the authority and date of the revision shall be listed. The term "Latest Revision" shall not be used.

g. Prior to commencement of construction CONTRACTOR shall submit an "Affidavit of Compliance" that confirm that all materials meet the requirements of this Specification.

h. The following documents shall be submitted to COMPANY prior to the start of construction activities:

   i. Inspection and Test Plan (ITP).

   ii. Inspection Procedures.

   iii. Test Procedure Qualification and Test Acceptance Criteria.

   iv. Procedure Qualification Record (PQR).

   v. Quality control program, quality plan, quality control procedure, including Quality Control Records (QCR's), records of quality inspection test reports, and test results.

   vi. Material Handling Procedure.

   vii. Materials and workmanship specifications.

   viii. One set of final drawings.

   ix. Maintain a complete set of As Built drawings at the jobsite.

   x. Method statements covering all construction activities.

   xi. Correction of non-conformances including remediation procedures.

   xii. Material Traceability Procedure.

All parties consent to this document being signed electronically - DTP&T/SJ/DR/INT/2021/0693

SECTION D – STANDARD DRAWINGS & DATASHEETS

13 DATASHEET TEMPLATES

Not applicable.

14 STANDARD DRAWINGS

Not applicable.

All parties consent to this document being signed electronically - DP&T/A/DR/INT/2021/6593

SECTION E - APPENDICES

APPENDIX A1. ATTACHMENTS - TYPICAL ANCHOR BOLT TYPES

The following sketches show the typical anchor bolt types referred in Section 6.2 of this Specification.

AGES-SP-01-004 APPENDIX A1 DWG 1	Anchor Bolts – Materials, Fabrication and Marking
AGES-SP-01-004 APPENDIX A1 DWG 2	Anchor Bolt Types

All parties consent to this document being signed electronically - DP&T/SJ/DR/INT/2021/6593

BOLT MATERIALS, FABRICATION, MARKING AND DESIGN CRITERIA

MATERIALS

1. FOR ANCHOR BOLTS, NUTS, WASHERS, ANCHOR PLATES AND SLEEVES MATERIALS, REFER TO SECTION 6.3 OF AGES–SP–01–004 ADNOC SPECIFICATION FOR ANCHOR BOLTS AND GROUTING.

2. IF CONTRACTOR PROPOSES TO USE HIGHER STRENGTH ANCHOR BOLTS CONFORMING TO ASTM F1554 GRADE 105 OR BS EN ISO 898–1 GRADE 8.8, THIS SHALL BE PERMITTED ONLY IN SPECIAL CASES SUBJECT TO COMPANY PRIOR APPROVAL. IN SUCH CASES, CONTRACTOR MUST PRODUCE DETAILED DESIGN CALCULATIONS FOR THE ANCHOR BOLT CAPACITY AND SUBMIT FOR COMPANY APPROVAL.

FABRICATION

3. BOLT, NUT AND SLEEVE FABRICATION SHALL COMPLY WITH THE MATERIAL SPECIFIED IN NOTE 1 ABOVE. FIT OF NUTS ON THREADS OF ANCHOR BOLTS SHALL BE VERIFIED BEFORE SHIPMENT.

PROTECTION

4. ANCHOR BOLT ASSEMBLIES SHALL BE HOT–DIPPED GALVANISED IN ACCORDANCE WITH ASTM A153 / A153M AND ASTM A563 / A563M CLASS C OR BS EN ISO 1461. GALVANIZED THREAD SHALL BE OILED, COVERED WITH LINEN, OR PROTECTED WITH PLASTIC SLEEVE.

MARKING

5. ANCHOR BOLTS SHALL BE MARKED BY THE MANUFACTURER AS INDICATED BELOW

BOLTS:

BOLTS WITH ANCHOR PLATES:	–	COMPLETE REFERENCE ON UPPER FACE OF ANCHOR PLATE
STUD BOLTS:	–	CLASS No. UPPER FLAT END
HOOK BOLTS:	–	COMPLETE REFERENCE ON FLAT AREA OF STRAIGHT PART OF HOOK END. SIZE OF FLAT AREA: 6mm X 60mm FOR <= 24mm DIAMETER 8mm X 80mm FOR > 24mm DIAMETER
SLEEVES:	–	COMPLETE REFERENCE AT ONE END
NUTS–THREADED CONNECTION:	–	CLASS F1.F2. CLASS No. ON ONE SIDE OF THE NUT
WASHERS:	–	CLASS F1.F2. CLASS No. ON ONE OF THE FLAT SIDES

6. MATERIALS SHALL BE COLD STAMPED PRIOR TO ANY QUENCHING OR TEMPERING. MARKING SHALL BE 3mm HIGH FOR < 24mm DIA AND 4mm HIGH FOR > 24mm DIA.

GENERAL NOTES

7. ALL DIMENSIONS ARE IN MILLIMETERS U.N.O

8. ALLOWABLE CAPACITIES (TENSION AND SHEAR) INDICATED ARE BASED ON A CORROSION ALLOWANCE OF 3mm.

9. FOR MINIMUM ANCHOR BOLT SPACING, REFER TO SECTION 6.13 OF AGES–SP–01–004.

10. FOR TORQUED AND UNTORQUED ANCHOR BOLTS, THE MINIMUM DISTANCE BETWEEN ANCHOR BOLT CENTRE TO EDGE OF CONCRETE, SHALL BE AS PER TABLE 6.7 OF AGES–SP–01–004.

11. THE TENSION/SHEAR CAPACITY OF THE ANCHOR BOLT INDICATED IN TABLES 1 & 2, SHALL BE USED WHEN THE TENSION/SHEAR FORCE IS ACTING INDEPENDENTLY. HOWEVER, WHEN TENSION AND SHEAR FORCES ARE ACTING SIMULTANEOUSLY, THE COMBINED TENSION AND SHEAR INTERACTION CHECK SHALL BE SATISFIED AS PER BELOW FORMULA.

i) CHECK FOR WORKING CAPACITY:

$$\frac{pt}{Pt} + \frac{pv}{Pv} \leqslant 1.2$$

WHERE
pt = APPLIED WORKING TENSION
pv = APPLIED WORKING SHEAR
Pt = ALLOWABLE WORKING TENSION CAPACITY
Pv = ALLOWABLE WORKING SHEAR CAPACITY

ii) CHECK FOR ULTIMATE CAPACITY:

$$\frac{ptu}{Ptu} + \frac{pvu}{Pvu} \leqslant 1.2$$

WHERE
ptu = APPLIED ULTIMATE TENSION
pvu = APPLIED ULTIMATE SHEAR
Ptu = ULTIMATE TENSION CAPACITY
Pvu = ULTIMATE SHEAR CAPACITY

12. IF THE APPLIED SHEAR IS LESS THAN 20% OF THE SHEAR CAPACITY, THEN FULL TENSION CAPACITY IS ALLOWED AND THE COMBINED SHEAR AND TENSION INTERACTION CHECKS CAN BE NEGLECTED.

13. IF THE APPLIED TENSION IS LESS THAN 20% OF THE TENSION CAPACITY, THEN FULL SHEAR CAPACITY IS ALLOWED AND THE COMBINED SHEAR AND TENSION INTERACTION CHECKS CAN BE NEGLECTED.

14. DUE TO BOLT HOLE TOLERANCE, ONLY 50% OF ANCHOR BOLTS SHALL BE USED TO TRANSFER THE SHEAR FORCE. HOWEVER, SHEAR FORCE CAN BE TRANSFERRED EQUALLY TO ALL ANCHOR BOLTS BY USING A PLATE WASHER WELDED TO THE BASE PLATE BETWEEN THE ANCHOR BOLT NUT AND THE TOP OF THE BASE PLATE.

BOLT CAPACITY

TABLE 1: ANCHOR BOLTS CAPACITIES BASED ON ALLOWABLE STEEL STRESS & CONCRETE FAILURE MODES:

(APPLICABLE TO BOLT TYPES – 'A', 'E' & 'F' FOR GRADE 4.6 AS PER BS EN ISO 898–1 OR GRADE 36 AS PER ASTM F 1554)

BOLT DIAMETER (mm)	NET AREA (mm^2)	DIAMETER – 3mm FOR CORROSION ALLOWANCE	ALLOWABLE CAPACITY OF BOLTS	
		EFFECTIVE AREA (mm^2)	TENSILE (kN)	SHEAR (kN)
16	157	97	11.7	6.6
20	245	169	20.3	11.5
24	353	260	31.2	17.3
27	459	353	42.3	21.9
30	561	442	53.1	24.7
36	817	672	80.7	33.5
42	1121	950	114.0	45.6
48	1473	1276	153.1	59.6
56	2030	1798	215.6	81.1
64	2676	2408	289.0	105.9
72	3460	3154	378.5	134.0

NOTES:

A. THE ABOVE CAPACITIES ARE BASED ON ALLOWABLE STRESS DESIGN (ASD), CONCRETE FAILURE MODES AND CONSIDERING THE DESIGN PARAMETERS LISTED BELOW FROM ITEM 'B' TO 'F'.

B. MINIMUM BOLT SPACING = 7 x BOLT DIAMETER.

C. MINIMUM COVER FROM FACE = 4 x BOLT DIAMETER (125mm MIN.) TO BOLTS AND 100mm TO SLEEVE/PLATE, WHICHEVER IS GREATER.

D. BOLT CAPACITY PROVIDED IN TABLE ARE BASED ON CONCRETE CUBE STRENGTH OF $40N/mm^2$.

E. MINIMUM PEDESTAL REINFORCEMENT SHALL BE 0.4% OR TOTAL BOLT AREA WHICHEVER IS HIGHER.

F. TOP THREE STIRRUPS (EACH LAYER) SHALL BE 4 LEGS OF 12mm DIA. BARS FOR 16–42mm DIA. BOLTS AND 8 LEGS OF 12mm DIA. BARS FOR 48–72mm DIA BOLTS.

G. TO ARRIVE AT ULTIMATE CAPACITY OF ANCHOR BOLT, A FACTOR OF 1.5 SHALL BE USED (ULTIMATE CAPACITY = 1.5 x ALLOWABLE CAPACITY).

TABLE 2: ANCHOR BOLTS CAPACITIES BASED ON STEEL STRESS ONLY (TENSION AND SHEAR):

(APPLICABLE FOR ALL BOLT TYPES (TYPE A,B,C,D,E & F) FOR GRADE 4.6 AS PER BS EN ISO 898–1 OR GRADE 36 AS PER ASTM F1554)

BOLT DIAMETER (mm)	NET AREA (mm^2)	DIAMETER – 3mm FOR CORROSION ALLOWANCE	ALLOWABLE CAPACITY OF BOLTS (ALLOWABLE STRESS DESIGN (ASD))		ULTIMATE CAPACITY OF BOLTS (ULTIMATE STRESS DESIGN (ULS))	
		EFFECTIVE AREA (mm^2)	TENSILE (kN)	SHEAR (kN)	TENSILE (kN)	SHEAR (kN)
16	157	97	11.7	7.8	17.5	11.7
20	245	169	20.2	13.5	30.4	20.2
24	353	260	31.2	20.8	46.8	31.2
27	459	353	42.3	28.2	63.5	42.3
30	561	442	53.0	35.3	79.5	53.0
36	817	672	80.6	53.7	120.9	80.6
42	1121	950	114.0	76.0	171.0	114.0
48	1473	1276	153.1	102.1	229.7	153.1
56	2030	1798	215.7	143.8	323.6	215.7
64	2676	2408	289.0	192.6	433.4	289.0
72	3460	3154	378.5	252.3	567.7	378.5

NOTES:

A. THE ABOVE CAPACITIES ARE BASED ON THE STEEL STRESSES INDICATED BELOW, THE CONTRACTOR SHALL DETERMINE THE ACTUAL CAPACITIES CONSIDERING CONCRETE FAILURE MODES AND SHALL SUBMIT CALCULATIONS FOR COMPANY APPROVAL.

B. THE ALLOWABLE TENSILE STRESS Ft = 120 MPa AND ALLOWABLE SHEAR STRESS Fv = 80 MPa SHALL BE CONSIDERED UNLESS OTHERWISE APPROVED BY COMPANY OR SPECIFIED IN PROJECT DOCUMENTS.

C. TO ARRIVE AT ULTIMATE CAPACITY OF ANCHOR BOLT, A FACTOR OF 1.5 SHALL BE USED (ULTIMATE CAPACITY = 1.5 X ALLOWABLE CAPACITY), UNLESS OTHERWISE APPROVED BY COMPANY OR SPECIFIED IN PROJECT DOCUMENTS.

USAGE OF BOLT

TABLE 3: USAGE SUMMARY OF ANCHOR BOLT TYPES

APPLICATION	BOLT TYPE TO BE USED				
	A	B	C	D	E/F
STEEL STRUCTURES (PIPE RACKS, PIPE SUPPORTS, PLATFORMS, SHELTERS, EQUIPMENT SUPPORTING STRUCTURES, ETC).	X				
VERTICAL VESSELS AND STACKS	X	X			
VERTICAL TOWERS, TALL EQUIPMENT COLUMNS & DRUMS		X	X		
HORIZONTAL VESSELS AND EXCHANGERS	X	X			
HORIZONTAL AND VERTICAL PUMPS	X	X			
FURNACES AND HEATERS	X	X			
COMPRESSOR AND VIBRATORY EQUIPMENT	X	X			
ANCHORAGE TO ELEVATED CONCRETE SLABS AND WALLS				X	
VENDOR STANDARDS APPROVED BY COMPANY					X

NOTES

1. FOR ANCHOR BOLT TYPES AND DETAILS REFER TO AGES–SP–01–004 APPENDIX–A1 DWG 2.

2. MATERIAL :
FOR ANCHOR BOLT MATERIALS, WASHERS AND NUTS, REFER TO AGES–SP–01–004 ANCHOR BOLT AND GROUTING SPECIFICATION.

3. CLASS OF BOLT :
ANCHOR BOLT SYSTEM USED FOR LOW TEMERATURE/COLD SERVICE SHALL BE IDENTIFIED AS F2, AND FOR NORMAL SERVICE AS F1.

4. INSTALLATION TOLERANCE :
FOR ANCHOR BOLT TOLERANCES, REFER TO AGES–SP–01–004 ANCHOR BOLT AND GROUTING SPECIFICATION.

5. PRIOR TO AND DURING CONCRETING ALL BOLTS SHALL BE SECURELY HELD IN POSITION BY USE OF SUITABLE ROBUST TEMPLATES, OR BY OTHER MEANS FOR PLACEMENT IN THE PROPER LOCATION AND TO ENSURE PROTECTION AGAINST BOLT DISPLACEMENT DURING PLACING OF CONCRETE.

6. WELDING OF ANCHOR BOLTS TO REINFORCING STEEL SHALL NOT BE PERMITTED.

7. ANCHOR BOLTS SHALL BE DE–GREASED AS PER COMPANY APPROVED METHOD BEFORE INSTALLATION.

8. ANCHOR BOLT SLEEVES SHALL BE CAPPED AND/OR FILLED WITH NON–BONDING MOULDABLE MATERIAL TO KEEP OUT WATER, CONCRETE, AND DEBRIS DURING THE PLACEMENT OF CONCRETE. THEREAFTER ANCHOR BOLT SLEEVES SHALL BE COMPLETELY FILLED WITH SPECIFIED GROUT MATERIAL AFTER INSTALLATION OF STRUCTURE/EQUIPMENT.

SCALE: NTS	DRG SIZE: A1

شركة بترول أبوظبي الوطنية
Abu Dhabi National Oil Company

DRAWING TITLE:
ANCHOR BOLTS
MATERIALS, FABRICATION AND MARKING

DRAWING No:	SHT:	REV:
AGES–SP–01–004 APPENDIX–A1 DWG 1	1 of 1	1

CAD FILENAME: AGES-SP-01-004-AP01-DWG1.DWG

All parties consent to this document being signed electronically-BP&TS/DR/INT/2021/6581

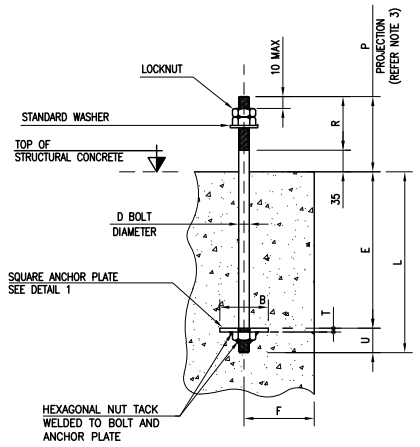

ANCHOR BOLT: TYPE - A

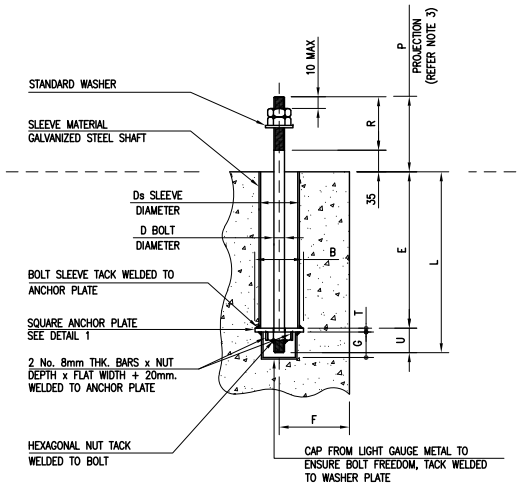

ANCHOR BOLT: TYPE - B

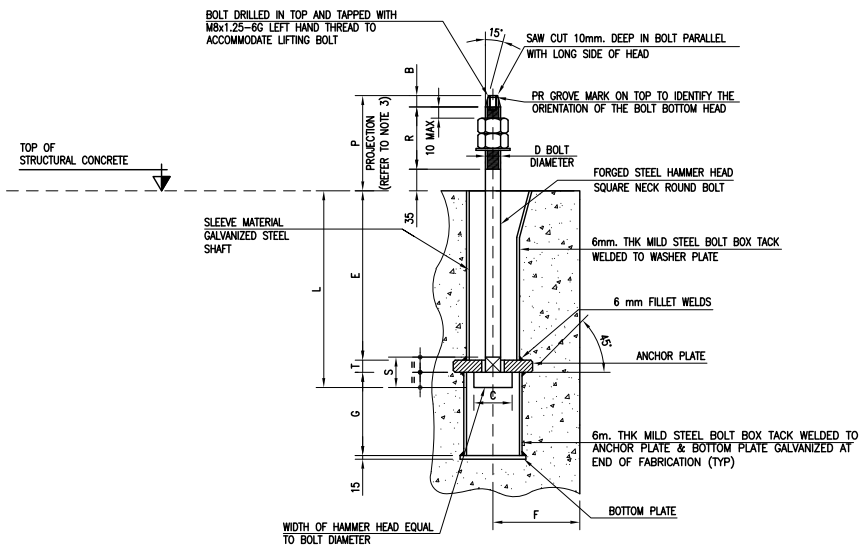

ANCHOR BOLT: TYPE - C

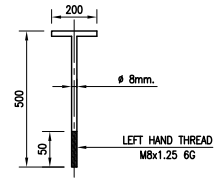

LIFTING BOLT DETAIL

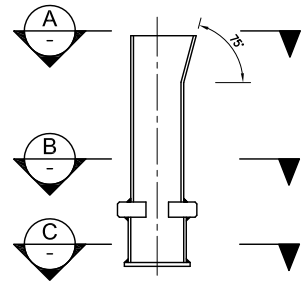

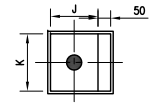

A SECTION

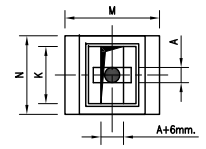

B SECTION

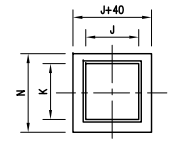

C SECTION

BOX DETAIL

BOLT (mm)				ANCHOR PLATE (mm)		MINIMUM EDGE DISTANCE	THREADED LENGTH (MIN)
DIAMETER D	L	E	U	B	T	F (mm)	R (mm)
16	435	400	35	80	20	125	P – 35
20	495	450	45	100	20	125	P – 35
24	560	505	55	125	20	160	P – 35
27	630	565	65	125	25	160	P – 35
30	670	600	70	125	25	160	P – 35
32	775	700	75	125	25	180	P – 35
36	830	750	80	125	25	180	P – 35
42	945	850	95	150	30	210	P – 35
48	1100	1000	100	150	30	240	P – 35
56	1315	1200	115	175	35	280	P – 35
64	1640	1500	140	200	40	320	P – 35
72	1760	1600	160	225	45	360	P – 35

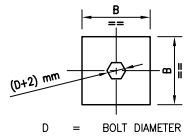

D = BOLT DIAMETER

DETAIL 1 - TYPICAL DETAIL OF SQUARE ANCHOR PLATE

BOLT (mm)			SLEEVE (mm)					MINIMUM EDGE DISTANCE	THREADED LENGTH (MIN)
DIAMETER D	L	U	Ds	E	B	T	G	F (mm)	R (mm)
16	250	35	50	215	80	10	35	140	P – 35
20	300	45	50	255	80	15	40	140	P – 35
24	350	55	75	295	110	20	45	160	P – 35
27	425	65	75	360	110	25	60	160	P – 35
30	475	70	75	405	110	25	65	160	P – 35
32	525	75	75	450	130	25	70	180	P – 35
36	575	80	75	495	130	25	75	180	P – 35
42	675	95	100	580	160	30	85	210	P – 35

BOLT (mm)					SLEEVE (mm)							MINIMUM EDGE DISTANCE	THREADED LENGTH (MIN)
DIAMETER D	L	B	C	S	J	K	M	N	E	G	T	F (mm)	R (mm)
30	505	14	70	60	70	95	135	135	450	155	25	170	P – 49
32	570	16	75	65	75	105	145	145	510	165	25	180	P – 51
36	630	18	80	70	80	110	150	150	570	175	25	180	P – 54
42	762	20	95	85	90	125	170	165	690	195	30	210	P – 55
48	892	24	110	95	100	140	200	180	810	215	35	240	P – 59
56	1065	27	125	110	115	160	250	200	970	235	40	280	P – 62
64	1255	32	145	130	130	180	300	220	1140	255	50	320	P – 67

NOTES:

A. BOLT BOX, ANCHOR PLATE AND BOTTOM PLATE TO BE MILD STEEL TO BS EN 10025 GRADE S275 JR.

B. THE BOLT BOX IS TO BE LOCATED CENTRALLY ON THE BOLT CIRCLE DIAMETER (BCD), WITH THE LONG SIDE OF THE WASHER PLATE SLOT TANGENTIAL TO THE BCD.

C. TOLERANCE IS PROVIDED ALONG THE BCD WITHIN THE LENGTH OF THE SLOT IN THE WASHER PLATE, AND CAN BE TILTED SLIGHTLY NORMAL TO THE BCD.

D. FOR INSTALLATION PROCEDURE OF TYPE-C BOLT REFER APPENDIX A2.

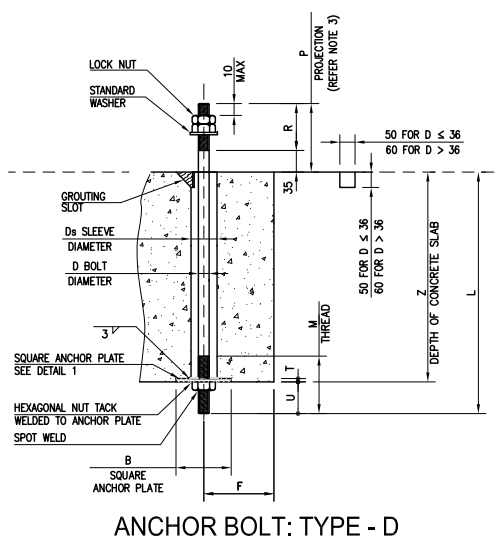

ANCHOR BOLT: TYPE - D

M = 4D OR 60mm WHICHEVER IS GREATER

BOLT (mm)			SLEEVE (mm)			MINIMUM EDGE DISTANCE	THREADED LENGTH (MIN)
DIAMETER D	L	U	Ds	B	T	F (mm)	R (mm)
16	Z+32	32	60	210	25	150	P – 35
20	Z+40	40	60	210	25	150	P – 35
24	Z+48	48	90	240	30	160	P – 35
30	Z+60	60	90	240	35	160	P – 35
36	Z+72	72	90	240	35	180	P – 35
42	Z+84	84	115	265	45	210	P – 35
48	Z+96	96	115	265	50	230	P – 35
56	Z+112	112	115	265	60	260	P – 35
64	Z+128	128	170	320	60	310	P – 35
72	Z+144	144	220	370	70	370	P – 35

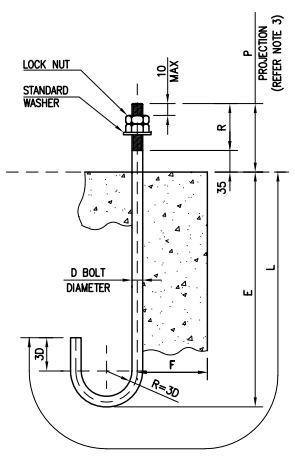

ANCHOR BOLT: TYPE - E (J-BOLT)

BOLT (mm)			MINIMUM EDGE DISTANCE	THREADED LENGTH (MIN)
DIAMETER D	L	E	F (mm)	R (mm)
16	560	400	125	P – 35
20	700	500	125	P – 35
24	840	600	160	P – 35
30	1050	750	160	P – 35
36	1260	900	180	P – 35
42	1470	1050	210	P – 35
48	1680	1200	240	P – 35

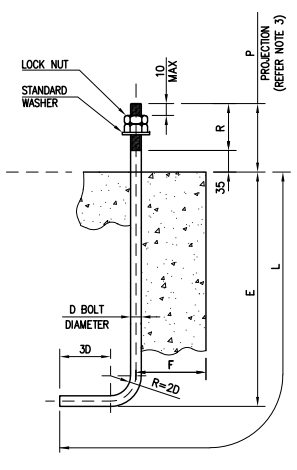

ANCHOR BOLT: TYPE - F (L-BOLT)

BOLT (mm)			MINIMUM EDGE DISTANCE	THREADED LENGTH (MIN)
DIAMETER D	L	E	F (mm)	R (mm)
16	470	400	125	P – 35
20	580	500	125	P – 35
24	700	600	160	P – 35
30	870	750	160	P – 35
36	1050	900	180	P – 35
42	1220	1050	210	P – 35
48	1390	1200	240	P – 35

GENERAL NOTES

1 ALL DIMENSIONS ARE IN MILLIMETERS UNLESS NOTED OTHERWISE.

2 BOLT DESIGNATION :

A1 . F1 . 24 . 150/N . 400

- A1 . F1 — CLASS OF BOLT
- 24 — NOMINAL SIZE
- 150 — DIMENSION "P" (BOLT PROJECTION ABOVE STRUCTURAL CONCRETE)
- N — NUMBER OF NUTS
- 400 — DIMENSION "E"

3 BOLT PROJECTION ABOVE CONCRETE (P):

P = t1 + t2 + (n + 0.5)d

WHERE

t1 = THICKNESS OF GROUT

t2 = THICKNESS OF BASE PLATE OR FRAME OR HEIGHT OF THE ANCHOR CHAIR OF VESSEL.

n = NUMBER OF NUTS.

d = DIAMETER OF BOLT.

4 FOR ACTUAL ANCHOR BOLT PROJECTION ABOVE CONCRETE REFER TO FOUNDATION CONSTRUCTION DRAWINGS. HOWEVER, EMBEDDED DEPTH OF ANCHOR BOLT SHALL BE AS PER THIS DRAWING.

5 FOR MATERIALS, FABRICATION AND MARKING OF ANCHOR BOLTS REFER TO AGES-SP-01-004 APPENDIX-A1 DWG 1.

SCALE: NTS | DRG SIZE: A1

شركة بترول أبوظبي الوطنية
Abu Dhabi National Oil Company

DRAWING TITLE:

ANCHOR BOLT TYPES

DRAWING No:	SHT:	REV:
AGES-SP-01-004 APPENDIX-A1 DWG 2	1 of 1	1

All parties consent to this document being signed electronically - EPSTS/DGR/INT/2021/6581

APPENDIX A2. ANCHOR BOLT TYPE-C INSTALLATION PROCEDURE

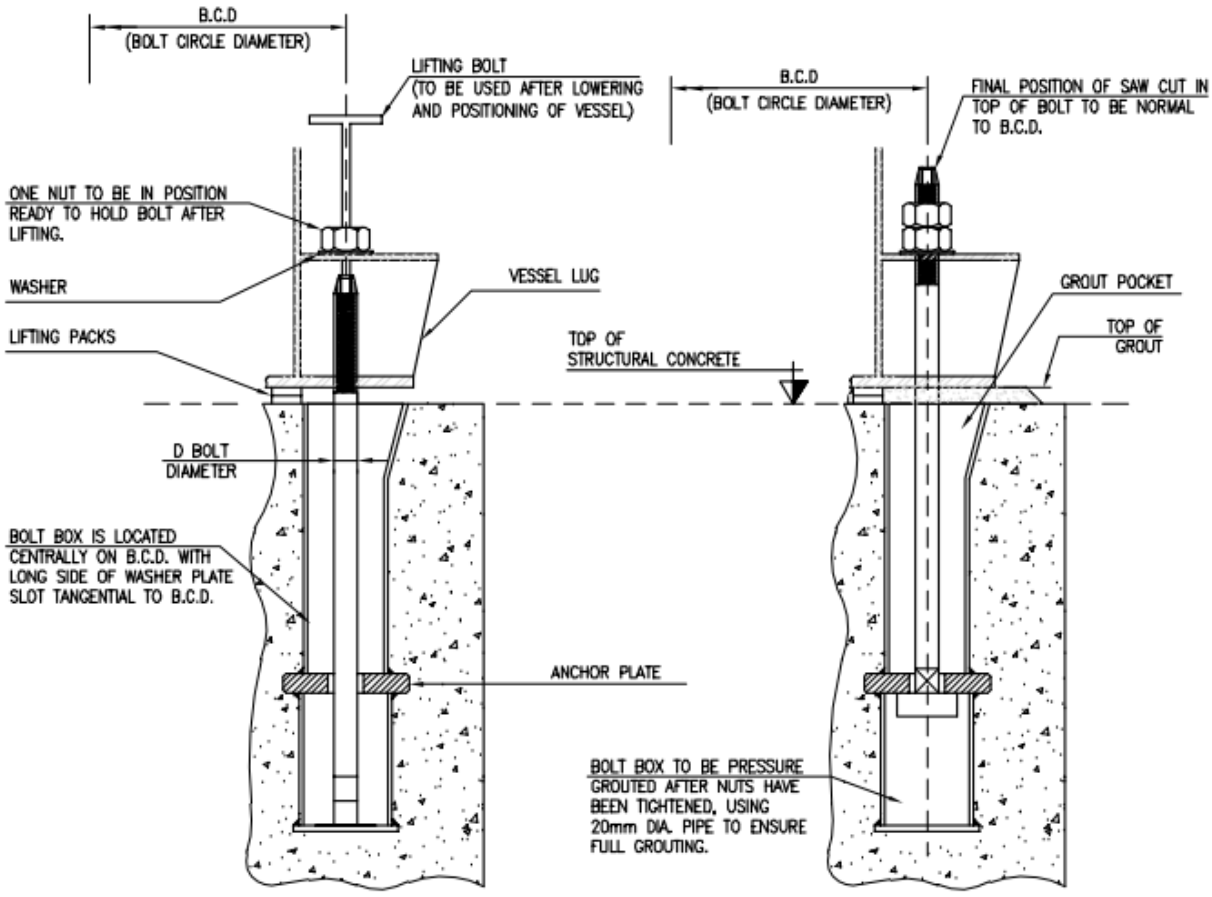

ANCHOR BOLT: TYPE - C SHOWING POSITION OF BOLT WHEN LOWERING AND POSITIONING VESSEL

ANCHOR BOLT: TYPE - C SHOWING FINAL POSITION OF BOLTS AND GROUTING

NOTES:–

1) ANCHOR BOLTS ARE TO BE REMOVED AND BOLT BOXES PLUGGED BEFORE FIXING THE BOLT BOXES RIGIDLY IN POSITION USING A TEMPLATE AND PLACING CONCRETE.

2) GROUTING OF BOLT BOXES ARE TO BE CARRIED OUT AFTER VESSEL HAS BEEN LOCATED TRUE TO LINE, LEVEL AND NUTS TIGHTENED.

3) GROUT IS TO BE NON–SHRINK GROUT, MIXED AND PLACED STRICTLY IN ACCORDANCE WITH THE MANUFACTURER'S INSTRUCTIONS.

All parties consent to this document being signed electronically - DP&T/A/DR/INT/2021/0693